NFPA®

1986

Standard on Respiratory Protection Equipment for Tactical and Technical Operations

2017

NFPA®

AVA Documents
Document Sharing Hub

Full document details: NFPA 1986 2017

IMPORTANT NOTICES AND DISCLAIMERS CONCERNING NFPA® STANDARDS

NOTICE AND DISCLAIMER OF LIABILITY CONCERNING THE USE OF NFPA STANDARDS

NFPA® codes, standards, recommended practices, and guides ("NFPA Standards"), of which the document contained herein is one, are developed through a consensus standards development process approved by the American National Standards Institute. This process brings together volunteers representing varied viewpoints and interests to achieve consensus on fire and other safety issues. While the NFPA administers the process and establishes rules to promote fairness in the development of consensus, it does not independently test, evaluate, or verify the accuracy of any information or the soundness of any judgments contained in NFPA Standards.

The NFPA disclaims liability for any personal injury, property or other damages of any nature whatsoever, whether special, indirect, consequential or compensatory, directly or indirectly resulting from the publication, use of, or reliance on NFPA Standards. The NFPA also makes no guaranty or warranty as to the accuracy or completeness of any information published herein.

In issuing and making NFPA Standards available, the NFPA is not undertaking to render professional or other services for or on behalf of any person or entity. Nor is the NFPA undertaking to perform any duty owed by any person or entity to someone else. Anyone using this document should rely on his or her own independent judgment or, as appropriate, seek the advice of a competent professional in determining the exercise of reasonable care in any given circumstances.

The NFPA has no power, nor does it undertake, to police or enforce compliance with the contents of NFPA Standards. Nor does the NFPA list, certify, test, or inspect products, designs, or installations for compliance with this document. Any certification or other statement of compliance with the requirements of this document shall not be attributable to the NFPA and is solely the responsibility of the certifier or maker of the statement.

REMINDER: UPDATING OF NFPA STANDARDS

Users of NFPA codes, standards, recommended practices, and guides ("NFPA Standards") should be aware that NFPA Standards may be amended from time to time through the issuance of Tentative Interim Amendments or corrected by Errata. An official NFPA Standard at any point in time consists of the current edition of the document together with any Tentative Interim Amendment and any Errata then in effect.

In order to determine whether an NFPA Standard has been amended through the issuance of Tentative Interim Amendments or corrected by Errata, visit the "Codes & Standards" section on NFPA's website. There, the document information pages located at the "List of NFPA Codes & Standards" provide up-to-date, document-specific information including any issued Tentative Interim Amendments and Errata.

To view the document information page for a specific Standard, go to http://www.nfpa.org/docinfo to choose from the list of NFPA Standards or use the search feature to select the NFPA Standard number (e.g., NFPA 101). The document information page includes postings of all existing Tentative Interim Amendments and Errata. It also includes the option to register for an "Alert" feature to receive an automatic email notification when new updates and other information are posted regarding the document.

ISBN: 978-145591622-1 (Print)
ISBN: 978-145591623-8 (PDF)

Documents
Document Sharing Hub

Full document details: NFPA 1986 2017

IMPORTANT NOTICES AND DISCLAIMERS CONCERNING NFPA® STANDARDS

ADDITIONAL NOTICES AND DISCLAIMERS

Updating of NFPA Standards

Users of NFPA codes, standards, recommended practices, and guides ("NFPA Standards") should be aware that these documents may be superseded at any time by the issuance of new editions or may be amended from time to time through the issuance of Tentative Interim Amendments or corrected by Errata. An official NFPA Standard at any point in time consists of the current edition of the document together with any Tentative Interim Amendments and any Errata then in effect. In order to determine whether a given document is the current edition and whether it has been amended through the issuance of Tentative Interim Amendments or corrected through the issuance of Errata, consult appropriate NFPA publications such as the National Fire Codes® Subscription Service, visit the NFPA website at www.nfpa.org, or contact the NFPA at the address listed below.

Interpretations of NFPA Standards

A statement, written or oral, that is not processed in accordance with Section 6 of the Regulations Governing the Development of NFPA Standards shall not be considered the official position of NFPA or any of its Committees and shall not be considered to be, nor be relied upon as, a Formal Interpretation.

Patents

The NFPA does not take any position with respect to the validity of any patent rights referenced in, related to, or asserted in connection with an NFPA Standard. The users of NFPA Standards bear the sole responsibility for determining the validity of any such patent rights, as well as the risk of infringement of such rights, and the NFPA disclaims liability for the infringement of any patent resulting from the use of or reliance on NFPA Standards.

NFPA adheres to the policy of the American National Standards Institute (ANSI) regarding the inclusion of patents in American National Standards ("the ANSI Patent Policy"), and hereby gives the following notice pursuant to that policy:

NOTICE: The user's attention is called to the possibility that compliance with an NFPA Standard may require use of an invention covered by patent rights. NFPA takes no position as to the validity of any such patent rights or as to whether such patent rights constitute or include essential patent claims under the ANSI Patent Policy. If, in connection with the ANSI Patent Policy, a patent holder has filed a statement of willingness to grant licenses under these rights on reasonable and nondiscriminatory terms and conditions to applicants desiring to obtain such a license, copies of such filed statements can be obtained, on request, from NFPA. For further information, contact the NFPA at the address listed below.

Law and Regulations

Users of NFPA Standards should consult applicable federal, state, and local laws and regulations. NFPA does not, by the publication of its codes, standards, recommended practices, and guides, intend to urge action that is not in compliance with applicable laws, and these documents may not be construed as doing so.

Copyrights

NFPA Standards are copyrighted. They are made available for a wide variety of both public and private uses. These include both use, by reference, in laws and regulations, and use in private self-regulation, standardization, and the promotion of safe practices and methods. By making these documents available for use and adoption by public authorities and private users, the NFPA does not waive any rights in copyright to these documents.

Use of NFPA Standards for regulatory purposes should be accomplished through adoption by reference. The term "adoption by reference" means the citing of title, edition, and publishing information only. Any deletions, additions, and changes desired by the adopting authority should be noted separately in the adopting instrument. In order to assist NFPA in following the uses made of its documents, adopting authorities are requested to notify the NFPA (Attention: Secretary, Standards Council) in writing of such use. For technical assistance and questions concerning adoption of NFPA Standards, contact NFPA at the address below.

For Further Information

All questions or other communications relating to NFPA Standards and all requests for information on NFPA procedures governing its codes and standards development process, including information on the procedures for requesting Formal Interpretations, for proposing Tentative Interim Amendments, and for proposing revisions to NFPA standards during regular revision cycles, should be sent to NFPA headquarters, addressed to the attention of the Secretary, Standards Council, NFPA, 1 Batterymarch Park, P.O. Box 9101, Quincy, MA 02269-9101; email: stds_admin@nfpa.org.

For more information about NFPA, visit the NFPA website at www.nfpa.org. All NFPA codes and standards can be viewed at no cost at www.nfpa.org/docinfo.

AVA Documents
Document Sharing Hub

Full document details: NFPA 1986 2017

Copyright © 2016 National Fire Protection Association®. All Rights Reserved.

NFPA® 1986

Standard on

Respiratory Protection Equipment for Tactical and Technical Operations

2017 Edition

This edition of NFPA 1986, *Standard on Respiratory Protection Equipment for Tactical and Technical Operations*, was prepared by the Technical Committee on Tactical and Technical Operations Respiratory Protection Equipment (FAE-TTO) and released by the Correlating Committee on Fire and Emergency Services Protective Clothing and Equipment (FAA-AAC). It was issued by the Standards Council on November 11, 2016, with an effective date of December 1, 2016.

This edition of NFPA 1986 was approved as an American National Standard on December 1, 2016.

Origin and Development of NFPA 1986

In September 2012, the Standards Council responded to a new project request submitted by Daniel Rossos, Chair of the Technical Committee on Respiratory Protection Equipment. The request related to the use of respiratory protection equipment for emergency operations that did not involve structural fire fighting. After its review, the Standards Council determined that there is a well-established technical need and a demonstrated demand for a standard addressing design, use, testing, and certification of self-contained breathing apparatus (SCBA) not covered by the requirements of NFPA 1981, *Standard on Open-Circuit Self-Contained Breathing Apparatus (SCBA) for Emergency Services*.

The Standards Council also established a new Technical Committee on Tactical and Technical Operations Respiratory Protection Equipment and invited individuals to apply for membership, particularly from law enforcement, federal agencies, defense organizations, hazardous material incident responders, and related agencies to establish a balanced technical committee representing the needs and requirements of the end user community.

This edition of the standard specifies the minimum requirements for the design (Chapter 6), performance (Chapter 7), testing (Chapter 8), and certification (Chapter 4) of new compressed breathing open-circuit SCBA and supplied air respirators (SAR) and for replacement parts, components, and accessories for non-structural fire-fighting devices.

NFPA and National Fire Protection Association are registered trademarks of the National Fire Protection Association, Quincy, Massachusetts 02169.

Documents
Document Sharing Hub

Full document details: NFPA 1986 2017

Correlating Committee on Fire and Emergency Services Protective Clothing and Equipment

William E. Haskell, III, *Chair*
National Institute for Occupational Safety & Health, MA [E]

Jason L. Allen, Intertek Testing Services, NY [RT]
James B. Area, Chimera Enterprises International, MD [SE]
Joseph Arrington, San Antonio Fire Department, TX [U]
Roger L. Barker, North Carolina State University, NC [SE]
James E. Brinkley, International Association of Fire Fighters, DC [L]
Rep. International Association of Fire Fighters
Steven D. Corrado, UL LLC, NC [RT]
Cristine Z. Fargo, International Safety Equipment Association, VA [M]
Robert A. Freese, Globe Manufacturing Company, NH [M]
Patricia A. Gleason, ASTM/Safety Equipment Institute (SEI), VA [RT]
David V. Haston, U.S. Department of Agriculture, ID [E]
Diane B. Hess, PBI Performance Products, Inc., NC [M]
Thomas M. Hosea, U.S. Department of the Navy, FL [RT]
James S. Johnson, Lawrence Livermore National Laboratory, CA [RT]
Jeff Legendre, Northborough Fire Department, MA [U]
Karen E. Lehtonen, Lion Group, Inc., OH [M]
David G. Matthews, Fire & Industrial (P.P.E) Ltd., United Kingdom [SE]
Rep. International Standards Organization
Michael F. McKenna, Michael McKenna & Associates, LLC, CA [SE]
Jack E. Reall, Columbus (OH) Division of Fire, OH [L]
Rep. Columbus Firefighters Union
Jeffrey O. Stull, International Personnel Protection, Inc., TX [M]
Tim W. Tomlinson, Addison Fire Department, TX [C]
Robert D. Tutterow, Jr., Fire Industry Equipment Research Organization (FIERO), NC [U]
Rep. NFPA Fire Service Section
William A. Van Lent, Veridian Ltd., Inc., IA [M]
Rep. Fire & Emergency Manufacturers & Services Association
Bruce H. Varner, BHVarner & Associates, AZ [M]
Rep. International Fire Service Training Association
Steven H. Weinstein, Honeywell Safety Products, CA [M]
Richard Weise, Los Angeles County Fire Department, CA [U]
Harry P. Winer, HIP Consulting LLC, MA [SE]

Alternates

Louis Carpentier, Innotex Inc., Canada [M]
(Alt. to William A. Van Lent)
Patricia A. Freeman, Globe Manufacturing Company, LLC, NH [M]
(Alt. to Robert A. Freese)
Tim J. Gardner, 3M Company, MN [M]
(Alt. to Cristine Z. Fargo)
Pamela A. Kavalesky, Intertek Testing Services, NY [RT]
(Alt. to Jason L. Allen)
Benjamin Mauti, Mine Safety Appliances Company, PA [M]
(Voting Alt.)
Judge W. Morgan, Tyco/Scott Safety, CA [M]
(Voting Alt.)
Gary L. Neilson, Sparks, NV [U]
(Alt. to Robert D. Tutterow, Jr.)
Amanda H. Newsom, UL LLC, NC [RT]
(Alt. to Steven D. Corrado)
Anthony Petrilli, U.S. Department of Agriculture, MT [E]
(Alt. to David V. Haston)
Stephen R. Sanders, ASTM/Safety Equipment Institute (SEI), VA [RT]
(Alt. to Patricia A. Gleason)
Russell Shephard, Australasian Fire & Emergency Service Authorities Council, Australia [SE]
(Alt. to David G. Matthews)
David P. Stoddard, Michael McKenna & Associates, LLC, CA [SE]
(Alt. to Michael F. McKenna)
Grace G. Stull, International Personnel Protection, Inc., TX [M]
(Alt. to Jeffrey O. Stull)
Jonathan V. Szalajda, National Institute for Occupational Safety & Health, PA [E]
(Alt. to William E. Haskell, III)
Donald B. Thompson, North Carolina State University, NC [SE]
(Alt. to Roger L. Barker)
Jian Xiang, The DuPont Company, Inc., VA [M]
(Alt. to Diane B. Hess)

Nonvoting

Robert J. Athanas, FDNY/SAFE-IR, Incorporated, NY [U]
Rep. TC on Electronic Safety Equipment
Christina M. Baxter, U.S. Department of Defense, VA [E]
Rep. TC on Hazardous Materials PC&E
Tricia L. Hock, ASTM/Safety Equipment Institute (SEI), VA [RT]
Rep. TC on Emergency Medical Services PC&E
Stephen J. King, Babylon, NY [SE]
Rep. TC on Structural and Proximity Fire Fighting PC&E
Jeremy Metz, West Metro Fire Rescue, CO [U]
Rep. TC on Special Operations PC&E
Brian Montgomery, U.S. Department of Justice, DC [E]
Daniel N. Rossos, Oregon Department of Public Safety Standards & Training, OR [E]
Rep. TC on Respiratory Protection Equipment
Rick L. Swan, IAFF Local 2881/CDF Fire Fighters, VA [L]
Rep. TC on Wildland Fire Fighting PC&E

Chris Farrell, NFPA Staff Liaison

This list represents the membership at the time the Committee was balloted on the final text of this edition. Since that time, changes in the membership may have occurred. A key to classifications is found at the back of the document.

NOTE: Membership on a committee shall not in and of itself constitute an endorsement of the Association or any document developed by the committee on which the member serves.

Documents
Document Sharing Hub
Full document details: NFPA 1986 2017

Committee Scope: This Committee shall have primary responsibility for documents on the design, performance, testing, and certification of protective clothing and protective equipment manufactured for fire and emergency services organizations and personnel, to protect against exposures encountered during emergency incident operations. This Committee shall also have the primary responsibility for documents on the selection, care, and maintenance of such protective clothing and protective equipment by fire and emergency services organizations and personnel.

Documents
2017 Edition
Document Sharing Hub

Full document details: NFPA 1986 2017

Technical Committee on Tactical and Technical Operations Respiratory Protection Equipment

Brian Montgomery, *Chair*
U.S. Department of Justice, DC [E]

Steven H. Weinstein, *Secretary*
Honeywell Safety Products, CA [M]

Craig Adams, Los Angeles Police Department, CA [U]
Rep. The InterAgency Board

Edward Anderson, Boston Fire Department, MA [U]

Daniel J. Barker, U.S. Department of Defense, MD [RT]

Gary Beals, U.S. Marine Corps, VA [U]

Shane Bray, Mine Safety Appliances Company, PA [M]

Brian J. Clifford, U.S. Federal Bureau of Investigation, VA [U]

Caoimhin P. Connell, Park County Sheriff's Office, CO [SE]
Rep. The InterAgency Board

Steven D. Corrado, UL LLC, NC [RT]

Robin R. Gainey, Jacksonville Fire Rescue Department, FL [L]
Rep. International Association of Fire Fighters

Beverly F. Gulledge, Tyco/Scott Safety, NC [M]

Beth C. Lancaster, U.S. Department of Defense, VA [E]

Evan Lewis, Fairfax County Fire & Rescue Department, VA [C]

Clint Mayhue, Avon Protection Systems, MD [M]

Chad A. Morey, Intertek Testing Services, NY [RT]

Casandra W. Robinson, National Institute of Standards & Technology, MD [RT]

Ed Roncone, Libertyville Police Department, IL [C]
Rep. Illinois Law Enforcement Alarm System

Stephen R. Sanders, Safety Equipment Institute (SEI), VA [RT]

Robert Sell, Draeger Safety, Inc., PA [M]

Randy Sterett, Orange County Sheriff's Department, CA [U]
Rep. National Bomb Squad Commanders Advisory Boar

Jonathan V. Szalajda, National Institute for Occupational Safety & Health, PA [E]

Alternates

Christina M. Baxter, U.S. Department of Defense, VA [E]
(Alt. to Beth C. Lancaster)

D. Mark Bledsoe, U.S. Federal Bureau of Investigations, VA [U]
(Alt. to Brian J. Clifford)

David M. Caretti, U.S. Department of Defense, MD [RT]
(Alt. to Daniel J. Barker)

Bryan Cooke, Fairfax County Police Department, VA [SE]
(Alt. to Caoimhin P. Connell)

Denice Young Durrant, UL LLC, NC [RT]
(Alt. to Steven D. Corrado)

Stacy Hall, MCSC, VA [U]
(Alt. to Gary Beals)

David Hodson, DAH Consultant, United Kingdom [M]
(Alt. to Robert Sell)

Judge W. Morgan, Tyco/Scott Safety, CA [M]
(Alt. to Beverly F. Gulledge)

Gregory W. Sackman, Seattle Police Department, WA [U]
(Alt. to Craig Adams)

Marco Tekelenburg, Mine Safety Appliance Company, PA [M]
(Alt. to Shane Bray)

James H. Wilcox, Avon Protection Systems, MD [M]
(Alt. to Clint Mayhue)

Nonvoting

Natalia M. Stakhiv, U.S. Department of Labor, DC [E]

Lana A. Nieves, U.S. Department of Labor, DC [E]

David G. Trebisacci, NFPA Staff Liaison

This list represents the membership at the time the Committee was balloted on the final text of this edition. Since that time, changes in the membership may have occurred. A key to classifications is found at the back of the document.

NOTE: Membership on a committee shall not in and of itself constitute an endorsement of the Association or any document developed by the committee on which the member serves.

Committee Scope: This Committee shall have primary responsibility for documents on respiratory protection equipment and selection, care and maintenance of respiratory protection equipment for non-fire fighting emergency services operations including, but not limited to, tactical law enforcement, confined space, and hazardous materials operations, during incidents involving hazardous or oxygen-deficient atmospheres. This committee does not cover respiratory protection equipment for firefighting operations addressed by the Technical Committee on Respiratory Protection Equipment.

Documents
Document Sharing Hub
Full document details: NFPA 1986 2017

Contents

Chapter 1 Administration **1986–** 6
1.1 Scope. **1986–** 6
1.2 Purpose. **1986–** 6
1.3 Application. **1986–** 6
1.4 Units. **1986–** 7

Chapter 2 Referenced Publications **1986–** 7
2.1 General. **1986–** 7
2.2 NFPA Publications. **1986–** 7
2.3 Other Publications. **1986–** 7
2.4 References for Extracts in Mandatory Sections. (Reserved) **1986–** 7

Chapter 3 Definitions **1986–** 7
3.1 General. **1986–** 7
3.2 NFPA Official Definitions. **1986–** 7
3.3 General Definitions. **1986–** 8

Chapter 4 Certification **1986–** 10
4.1 General. **1986–** 10
4.2 Certification Program. **1986–** 10
4.3 Inspections and Testing. **1986–** 11
4.4 Recertification. **1986–** 13
4.5 Manufacturers' Quality Assurance Programs . **1986–** 13
4.6 Hazards Involving Compliant Product. **1986–** 14
4.7 Manufacturers' Investigations of Complaints and Returns. **1986–** 14
4.8 Manufacturers' Safety Alert and Product Recall Systems. **1986–** 14

Chapter 5 Labeling and Information **1986–** 15
5.1 Product Label Requirements. **1986–** 15
5.2 User Information. **1986–** 15

Chapter 6 Design Requirements **1986–** 16
6.1 General Design Requirements. **1986–** 16
6.2 End-of-Service-Time Indicator (EOSTI) Design Requirements. **1986–** 16
6.3 Optional HUD Design Requirements. **1986–** 16
6.4 Optional Rapid Intervention Crew/Company Universal Air Connection (RIC UAC) Design Requirements. **1986–** 17
6.5 Power Source Design Requirements. **1986–** 18
6.6 Optional Emergency Breathing Safety System (EBSS) Design Requirements. **1986–** 19
6.7 Accessories Design Requirements. **1986–** 19

Chapter 7 Performance Requirements **1986–** 19
7.1 Airflow Performance. **1986–** 19
7.2 Environmental Temperature Performance. ... **1986–** 19
7.3 Vibration Resistance Performance. **1986–** 20
7.4 Corrosion Resistance Performance. **1986–** 20
7.5 Particulate Resistance Performance. **1986–** 20
7.6 Facepiece Lens Abrasion Resistance Performance. **1986–** 20
7.7 Nonelectronic Communications Performance Requirements. **1986–** 20
7.8 Flame Resistance Performance. **1986–** 21
7.9 Carbon Dioxide (CO_2) Content Performance. **1986–** 21
7.10 EOSTI Alarm Recognition. **1986–** 21
7.11 Additional SCBA HUD Performance. **1986–** 21
7.12 RIC UAC Performance Requirements. **1986–** 21
7.13 Breathing Air Cylinder Performance Requirements. **1986–** 21
7.14 Supplementary Voice Communications System Performance Requirements. **1986–** 21
7.15 Immersion Leakage Performance Requirements. **1986–** 21
7.16 Low Power Capacity. **1986–** 21
7.17 Emergency Breathing Safety System Cold Temperature Performance Requirements. **1986–** 21

Chapter 8 Test Methods **1986–** 22
8.1 Airflow Performance Test. **1986–** 22
8.2 Environmental Temperature Tests. **1986–** 25
8.3 Vibration Test. **1986–** 28
8.4 Accelerated Corrosion Test. **1986–** 30
8.5 Particulate Test. **1986–** 30
8.6 Facepiece Lens Abrasion Test. **1986–** 31
8.7 Nonelectronic Communications Test. **1986–** 34
8.8 Flame Test. **1986–** 36
8.9 Facepiece Carbon Dioxide Content Test. **1986–** 41
8.10 EOSTI Recognition Test. **1986–** 41
8.11 HUD Wiring Connection Strength Test. **1986–** 42
8.12 HUD Low Power Source Alert Signal Test. **1986–** 42
8.13 HUD Visibility Tests. **1986–** 43
8.14 Light Test. **1986–** 43
8.15 HUD Disabling Glare Test. **1986–** 44
8.16 Cylinder Refill Breathing Performance Test. . **1986–** 44
8.17 RIC UAC System Fill Rate Test. **1986–** 45
8.18 Breathing Air Cylinder and Valve Assembly Retention Test. **1986–** 45
8.19 Immersion Leakage Test. **1986–** 46
8.20 Cylinder Connections and Accessibility Test. . **1986–** 46
8.21 Supplementary Voice Communications System Performance Test. **1986–** 47
8.22 Low Power Capacity Test. **1986–** 49
8.23 Emergency Breathing Safety System (EBSS) Cold Temperature Performance Test. **1986–** 49

Annex A Explanatory Material **1986–** 50

Annex B Surrogate Cylinder Preparation Procedure **1986–** 54

Annex C Informational References **1986–** 55

Index **1986–** 56

Documents 2017 Edition Document Sharing Hub

Full document details: NFPA 1986 2017

NFPA 1986

Standard on

Respiratory Protection Equipment for Tactical and Technical Operations

2017 Edition

IMPORTANT NOTE: This NFPA document is made available for use subject to important notices and legal disclaimers. These notices and disclaimers appear in all publications containing this document and may be found under the heading "Important Notices and Disclaimers Concerning NFPA Standards." They can also be viewed at www.nfpa.org/disclaimers or obtained on request from NFPA.

UPDATES, ALERTS, AND FUTURE EDITIONS: New editions of NFPA codes, standards, recommended practices, and guides (i.e., NFPA Standards) are released on scheduled revision cycles. This edition may be superseded by a later one, or it may be amended outside of its scheduled revision cycle through the issuance of Tentative Interim Amendments (TIAs). An official NFPA Standard at any point in time consists of the current edition of the document, together with all TIAs and Errata in effect. To verify that this document is the current edition or to determine if it has been amended by TIAs or Errata, please consult the National Fire Codes® Subscription Service or the "List of NFPA Codes & Standards" at www.nfpa.org/docinfo. In addition to TIAs and Errata, the document information pages also include the option to sign up for alerts for individual documents and to be involved in the development of the next edition.

NOTICE: An asterisk (*) following the number or letter designating a paragraph indicates that explanatory material on the paragraph can be found in Annex A.

A reference in brackets [ ] following a section or paragraph indicates material that has been extracted from another NFPA document. As an aid to the user, the complete title and edition of the source documents for extracts in mandatory sections of the document are given in Chapter 2 and those for extracts in informational sections are given in Annex C. Extracted text may be edited for consistency and style and may include the revision of internal paragraph references and other references as appropriate. Requests for interpretations or revisions of extracted text shall be sent to the technical committee responsible for the source document.

Information on referenced publications can be found in Chapter 2 and Annex C.

Chapter 1 Administration

1.1 Scope.

1.1.1* This standard shall specify the minimum requirements for the design, performance, testing, and certification of (1) new compressed breathing air open-circuit self-contained breathing apparatus (SCBA) and compressed breathing air combination open-circuit self-contained breathing apparatus and supplied air respirators (SCBA/SARs); and (2) replacement parts, components, and accessories for those respirators.

1.1.2 Reserved.

1.1.3 This standard shall not specify requirements for respiratory protection equipment that is used for fire-fighting operations.

1.1.4 This standard shall not specify requirements for other types of SCBA.

1.1.5* This standard shall not specify requirements for any accessories that could be attached to the certified product that are not certified by the National Institute for Occupational Safety and Health (NIOSH).

1.1.6 This standard shall not establish criteria for SCBA for underwater operations.

1.1.7 This standard shall not establish criteria for protection from ionizing radiation.

1.1.8 This standard shall not be construed as addressing all the safety concerns associated with the use of compliant SCBA and combination SCBA/SARs. It shall be the responsibility of the persons and organizations that use compliant SCBA and combination SCBA/SARs to establish safety and health practices and to determine the applicability of regulatory limitations prior to use.

1.1.9 This standard shall not be construed as addressing all the safety concerns, if any, associated with the use of this standard by testing facilities. It shall be the responsibility of the persons and organizations that use this standard to conduct testing of SCBA and combination SCBA/SARs to establish safety and health practices and to determine the applicability of regulatory limitations prior to using this standard for any designing, manufacturing, and testing.

1.1.10 Nothing herein shall restrict any jurisdiction or manufacturer from exceeding these minimum requirements.

1.2 Purpose.

1.2.1 The purpose of this standard shall be to establish minimum levels of SCBA performance for respiratory protection of emergency services personnel in non-fire-fighting operations in atmospheres that are categorized as immediately dangerous to life or health (IDLH).

1.2.2* Controlled laboratory tests used to determine compliance with the performance requirements of this standard shall not be deemed as establishing performance levels for all respiratory protective situations and IDLH atmospheres to which personnel can be exposed.

1.2.3 This standard shall not be interpreted or used as a detailed manufacturing or purchase specification but shall be permitted to be referenced in purchase specifications as minimum requirements.

1.3 Application.

1.3.1 This standard shall apply to all open-circuit SCBA and combination SCBA/SARs used by emergency services organizations for respiratory protection of its personnel during but not limited to rescue, hazardous materials response, tactical law enforcement operations, confined space entry, terrorist incident response, and similar operations where oxygen deficiency, particulates, toxic products, products of combustion, or other IDLH atmospheres exist or could exist at the incident scene.

1.3.1.1* If the SCBA is equipped with an emergency breathing safety system (EBSS), the EBSS performance requirements set forth in this standard shall apply only to open-circuit SCBA and combination SCBA/SARs used by emergency services personnel for respiratory protection of its personnel during the applications listed in 1.3.1.

AVA Documents
Document Sharing Hub
Full document details: NFPA 1986 2017

1.3.2 This standard shall apply to the design, manufacturing, testing, and certification of new open-circuit SCBA and combination SCBA/SARs.

1.3.3 This standard shall not apply to accessories that can be attached to an open-circuit SCBA and combination SCBA/SARs but are not certified by NIOSH for use with that specific SCBA or combination SCBA/SARs.

1.3.4 Reserved.

1.3.5 This standard shall not apply to closed-circuit SCBA.

1.3.6* This standard shall not apply to the use of SCBA and combination SCBA/SARs.

1.4 Units.

1.4.1 In this standard, values for measurement are followed by an equivalent in parentheses, but only the first stated value shall be regarded as the requirement.

1.4.2 Equivalent values in parentheses shall not be considered as the requirement because those values might be approximate.

Chapter 2 Referenced Publications

2.1 General. The documents or portions thereof listed in this chapter are referenced within this standard and shall be considered part of the requirements of this document.

2.2 NFPA Publications. National Fire Protection Association, 1 Batterymarch Park, Quincy, MA 02169-7471.

NFPA 1971, *Standard on Protective Ensembles for Structural Fire Fighting and Proximity Fire Fighting,* 2013 edition.

NFPA 1989, *Standard on Breathing Air Quality for Emergency Services Respiratory Protection,* 2013 edition.

NFPA 1994, *Standard on Protective Ensembles for First Responders to CBRN Terrorism Incidents,* 2012 edition.

2.3 Other Publications.

2.3.1 ANSI Publications. American National Standards Institute, Inc., 25 West 43rd Street, 4th floor, New York, NY 10036.

ANSI/ASA S3.2, *Method for Measuring the Intelligibility of Speech over Communication Systems,* 2009 (R2014).

2.3.2 ASTM Publications. ASTM International, 100 Barr Harbor Drive, P. O. Box C700, West Conshohocken, PA 19428-2959.

ASTM B117, *Standard Test Method for Salt Spray (Fog) Testing,* 2003.

ASTM D1003, *Standard Test Method for Haze and Luminous Transmittance of Transparent Plastics,* 2000.

2.3.3 EBU Publications. European Broadcasting Union, Department of Technology & Innovation, L'Ancienne-Route 17A, CH-1218 Grand-Saconnex, Geneva, Switzerland.

EBU Technical Recommendation R68, *Alignment level in digital audio production equipment and in digital audio recorders,* 2000.

2.3.4 EN Publications (CEN). European Committee for Standardization Central Secretariat, rue de Stassart 36, B 1050 Brussels, Belgium.

EN 136, *Respiratory protective devices — Full face masks — Requirements, testing, marking,* 1998.

2.3.5 IEC Publications. International Electrotechnical Commission, 3, rue de Varembé, P.O. Box 131, CH-1211 Geneva 20, Switzerland.

IEC 60268, *Sound System Equipment — Part 16: Objective Rating of Speech Intelligibility by Speech Transmission Index,* 2003.

2.3.6 ISO Publications. International Organization for Standardization, 1, rue de Varembé, Case postale 56, CH-1211 Genéve 20, Switzerland.

ISO Guide 27, *Guidelines for corrective action to be taken by a certification body in the event of misuse of its mark of conformity,* 1983.

ISO 9001, *Quality management systems — Requirements,* 2005.

ISO/IEC 17000, *Conformity assessment — Vocabulary and general principles,* 2004.

ISO/IEC 17011, *Conformity assessment — General requirements for accreditation bodies accrediting conformity assessment bodies,* 2004.

ISO/IEC 17021, *Conformity assessment — Requirements for bodies providing audit and certification of management systems,* 2011.

ISO/IEC 17025, *General requirements for the competence of testing and calibration laboratories,* 2005.

ISO/IEC 17065, *Conformity assessment — Requirements for bodies certifying products, processes and services,* 2012.

2.3.7 UL Publications. Underwriters Laboratories Inc., 333 Pfingsten Road, Northbrook, IL 60062-2096.

ANSI/UL 913, *Standard for Intrinsically Safe Apparatus and Associated Apparatus for Use in Class I, II, and III, Division 1 Hazardous (Classified) Locations,* Sixth edition.

2.3.8 U.S. Government Publications. U.S. Government Printing Office, Washington, DC 20402.

Statement of Standard for NIOSH CBRN SCBA Testing, 2002.

Title 42, Code of Federal Regulations, Part 84, "Approval of Respiratory Protective Devices," 1 October 2004.

2.3.9 Other Publications.

Merriam-Webster's Collegiate Dictionary, 11th edition, Merriam-Webster, Inc., Springfield, MA, 2003.

2.4 References for Extracts in Mandatory Sections. (Reserved)

Chapter 3 Definitions

3.1 General. The definitions contained in this chapter shall apply to the terms used in this standard. Where terms are not defined in this chapter or within another chapter, they shall be defined using their ordinarily accepted meanings within the context in which they are used. *Merriam-Webster's Collegiate Dictionary,* 11th edition, shall be the source for the ordinarily accepted meaning.

3.2 NFPA Official Definitions.

3.2.1* Approved. Acceptable to the authority having jurisdiction.

Documents 2017 Edition Document Sharing Hub

Full document details: NFPA 1986 2017

3.2.2* Authority Having Jurisdiction (AHJ). An organization, office, or individual responsible for enforcing the requirements of a code or standard, or for approving equipment, materials, an installation, or a procedure.

3.2.3 Labeled. Equipment or materials to which has been attached a label, symbol, or other identifying mark of an organization that is acceptable to the authority having jurisdiction and concerned with product evaluation, that maintains periodic inspection of production of labeled equipment or materials, and by whose labeling the manufacturer indicates compliance with appropriate standards or performance in a specified manner.

3.2.4* Listed. Equipment, materials, or services included in a list published by an organization that is acceptable to the authority having jurisdiction and concerned with evaluation of products or services, that maintains periodic inspection of production of listed equipment or materials or periodic evaluation of services, and whose listing states that either the equipment, material, or service meets appropriate designated standards or has been tested and found suitable for a specified purpose.

3.2.5 Shall. Indicates a mandatory requirement.

3.2.6 Should. Indicates a recommendation or that which is advised but not required.

3.2.7 Standard. An NFPA Standard, the main text of which contains only mandatory provisions using the word "shall" to indicate requirements and that is in a form generally suitable for mandatory reference by another standard or code or for adoption into law. Nonmandatory provisions are not to be considered a part of the requirements of a standard and shall be located in an appendix, annex, footnote, informational note, or other means as permitted in the NFPA Manuals of Style. When used in a generic sense, such as in the phrase "standards development process" or "standards development activities," the term "standards" includes all NFPA Standards, including Codes, Standards, Recommended Guides, and Guides.

3.3 General Definitions.

3.3.1 Accessory. Any item that could be attached to a certified product but that is not necessary for the certified product to meet the requirements of the standard.

3.3.2 Accreditation. Third-party attestation related to a conformity assessment body conveying formal demonstration of its competence to carry out specific conformity assessment tasks. These tasks include sampling and testing, inspection, certification, and registration. [**ISO/IEC 17000**, 2004]

3.3.3 Atmosphere-Supplying Respirator. A respirator that supplies the user with breathing air from a source independent of the ambient atmosphere and includes a self-contained breathing apparatus (SCBA) and/or a supplied air respirator (SAR). *[See also 3.3.13, Combination SCBA/SAR; 3.3.56, Self-Contained Breathing Apparatus (SCBA); and 3.3.64, Supplied Air Respirator (SAR).]*

3.3.4 Audit. Systematic, independent, documented process for obtaining records, statements of fact or other relevant information and assessing them objectively to determine the extent to which specified requirements are fulfilled. [**ISO/IEC 17000**, 2004]

3.3.5 Breathing Air. See 3.3.17, Compressed Breathing Air.

3.3.6 Breathing Air Cylinder. The pressure vessel or vessels that are an integral part of the SCBA and that contain the breathing gas supply; can be configured as a single cylinder or other pressure vessel or as multiple cylinders or pressure vessels.

3.3.7 Breathing Air/Gas Container. See 3.3.6, Breathing Air Cylinder.

3.3.8 Certification. A system whereby a certification organization determines that a manufacturer has demonstrated the ability to produce a product that complies with the requirements of this standard, authorizes the manufacturer to use a label on listed products that comply with the requirements of this standard, and establishes a follow-up program conducted by the certification organization as a check on the methods the manufacturer uses to determine continued compliance of labeled and listed products with the requirements of this standard.

3.3.9 Certification Organization. An independent third-party organization that determines product compliance with the requirements of this standard with a labeling/listing/follow-up program.

3.3.10 Certified. The resultant condition of a product having undergone certification in accordance with the requirements of this standard. *(See also 3.3.43, NIOSH Certified.)*

3.3.11 Char. The formation of a brittle residue when material is exposed to thermal energy.

3.3.12 Closed-Circuit SCBA. A recirculation-type SCBA in which the wearer rebreathes exhaled gas after the carbon dioxide has been removed from the exhalation gas and the oxygen content within the system has been restored from sources such as compressed breathing air, chemical oxygen, liquid oxygen, or compressed gaseous oxygen.

3.3.13* Combination SCBA/SAR. An atmosphere-supplying respirator that supplies a respirable atmosphere to the user from a combination of two breathing air sources that both are independent of the ambient environment. *[See also 3.3.3, Atmosphere-Supplying Respirator; 3.3.56, Self-Contained Breathing Apparatus (SCBA); and 3.3.64, Supplied Air Respirator (SAR).]*

3.3.14 Compliance. The condition of meeting or exceeding all applicable requirements of this standard.

3.3.15 Compliant. Meeting or exceeding all applicable requirements of this standard.

3.3.16* Component. Any material, part, or subassembly used in the construction of the compliant product.

3.3.17* Compressed Breathing Air. A respirable gas mixture derived from normal atmospheric air or from manufactured synthetic air, stored in a compressed state in storage cylinders and respirator breathing air cylinders, and supplied to the user in a gaseous form.

3.3.18 Cylinder. See 3.3.6, Breathing Air Cylinder.

3.3.19 Demand SCBA. See 3.3.42, Negative Pressure SCBA.

3.3.20 Drip. To run or fall in drops or blobs.

3.3.21 EBSS. Emergency breathing safety system.

Documents
Document Sharing Hub
Full document details: NFPA 1986 2017

3.3.22 Emergency Breathing Safety System (EBSS). A device on an SCBA that allows users to share their available air supply in an emergency situation.

3.3.23 End-of-Service-Time Indicator (EOSTI). A warning device on an SCBA that warns the user that the end of the breathing air supply is approaching.

3.3.24 EOSTI. End-of-service-time indicator.

3.3.25 Fabric Component. Natural or synthetic material of combination of materials that is pliable and made by weaving, felting, forming, or knitting.

3.3.26 Facepiece. The component of an SCBA that covers the wearer's nose, mouth, and eyes.

3.3.27 Follow-up Program. The sampling, inspections, tests, or other measures conducted by the certification organization on a periodic basis to determine the continued compliance of labeled and listed products that are being produced by the manufacturer to the requirements of this standard.

3.3.28 Gas. Matter in a gaseous state at standard temperature and pressure.

3.3.29 HATS. Head and torso simulator.

3.3.30 Haze. Light that is scattered as a result of passing through a transparent object.

3.3.31 Head and Torso Simulator (HATS). A mannequin with built-in ear and mouth simulators that provides a realistic reproduction of the acoustic properties of an average adult human head and torso.

3.3.32 Heads-Up Display (HUD). Visual display of information and system condition status visible to the wearer.

3.3.33 HUD. Heads-up display.

3.3.34 Identical SCBA. SCBA that are produced to the same engineering and manufacturing specifications.

3.3.35 Inspection. Examination of a product design, product, process or installation and determination of its conformity with specific requirements or, on the basis of professional judgment, with general requirements. [**ISO/IEC 17000**, 2004]

3.3.36 Manufacturer. The entity that directs and controls any of the following: compliant product design, compliant product manufacturing, or compliant product quality assurance; also, the entity that assumes liability for the compliant product or provides the warranty for a compliant product.

3.3.37 Melt. A response to heat by a material resulting in evidence of flowing or dripping.

3.3.38 Microphone Measurement Point (MMP). A point 1.5 m in front of and on the axis of the lip position of typical human mouth (or artificial mouth) and 1.5 m above the floor.

3.3.39 MMP. Microphone measurement point.

3.3.40 Mouth Reference Point (MRP). A point 50 mm in front of and on the axis of the lip position of a typical human mouth (or artificial mouth).

3.3.41 MRP. Mouth reference point.

3.3.42 Negative Pressure SCBA. An SCBA in which the pressure inside the facepiece, in relation to the pressure surrounding the outside of the facepiece, is negative during any part of the inhalation or exhalation cycle when tested by NIOSH in accordance with 42 CFR 84.

3.3.43* NIOSH Certified. Tested and certified by the National Institute for Occupational Safety and Health (NIOSH) of the U.S. Department of Health and Human Services in accordance with the requirements of 42 CFR 84, Subpart H.

3.3.44 Open-Circuit SCBA. An SCBA in which exhalation is vented to the atmosphere and not rebreathed.

3.3.45 Pink Noise. Noise that contains constant energy per octave band.

3.3.46 Positive Pressure SCBA. See 3.3.47, Pressure Demand SCBA.

3.3.47 Pressure Demand SCBA. An SCBA in which the pressure inside the facepiece, in relation to the pressure surrounding the outside of the facepiece, is positive during both inhalation and exhalation when tested by NIOSH in accordance with 42 CFR 84, Subpart H.

3.3.48* Product Label. A marking provided by the manufacturer for each compliant product containing compliance statements, certification statements, manufacturer and model information, or similar data.

3.3.49 Rapid Intervention Crew/Company Universal Air Connection (RIC UAC). A system that allows emergency replenishment of breathing air to the SCBA of disabled or entrapped fire or emergency services personnel.

3.3.50 Rated Service Time. The period of time, stated on an SCBA's NIOSH certification label, that the SCBA supplied air to the breathing machine when tested to 42 CFR 84, Subpart H.

3.3.51 RIC. Rapid intervention crew/company.

3.3.52 Sample. (1) Product, component, or accessory randomly selected from the manufacturer's production line, the manufacturer's inventory, or the open market. (2) Product, component, or accessory that is conditioned for testing. *(See also 3.3.60, Specimen.)*

3.3.53 SAR. Supplied air respirator.

3.3.54 SCBA. Self-contained breathing apparatus.

3.3.55 SCBA/SAR. Self-contained breathing apparatus/supplied air respirator. *[See also 3.3.13, Combination SCBA/SAR; 3.3.56, Self-Contained Breathing Apparatus (SCBA); and 3.3.64, Supplied Air Respirator (SAR).]*

3.3.56* Self-Contained Breathing Apparatus (SCBA). An atmosphere-supplying respirator the breathing air source of which is designed to be carried by the user.

3.3.57 Service Life. The period for which compliant product should be useful before retirement.

3.3.58 Service Time. See 3.3.50, Rated Service Time.

3.3.59 Sound Pressure Level (SPL). The local pressure deviation from the ambient (average, or equilibrium) atmospheric pressure caused by a sound wave.

3.3.60 Specimen. The conditioned product, component, or accessory that is tested. Specimens are taken from samples. (*See also 3.3.52, Sample.*)

AVA Documents 2017 Edition Document Sharing Hub

Full document details: NFPA 1986 2017

3.3.61 Speech Transmission Index (STI). A measure of intelligibility of speech quality on a scale of intelligibility, the values of which vary from 0 (completely unintelligible) to 1 (perfect intelligibility).

3.3.62 SPL. Sound pressure level.

3.3.63 STI. Speech transmission index.

3.3.64* Supplied Air Respirator (SAR). An atmosphere-supplying respirator for which the source of breathing air is not designed to be carried by the user; also known as an *airline respirator. [See also 3.3.3, Atmosphere-Supplying Respirator; 3.3.13, Combination SCBA/SAR; and 3.3.56, Self-Contained Breathing Apparatus (SCBA).]*

3.3.65 Synthetic Breathing Air. Manufactured breathing air produced by blending nitrogen and oxygen. *(See also 3.3.17, Compressed Breathing Air.)*

3.3.66 Testing. Determination of one or more characteristics of an object of conformity assessment, according to a procedure. Testing typically applies to materials, products or processes. [**ISO/IEC 17000**, 2004]

3.3.67 UAC. Universal air connection.

3.3.68 Universal Air Connection (UAC). The male fitting affixed to the SCBA and the female fitting affixed to the filling hose that allow emergency replenishment of breathing air to an SCBA breathing air cylinder. Also known as Rapid Intervention Crew/Company Universal Air Connection.

3.3.69 Variant. A grouping of subassemblies (i.e., components) having common functional and/or design characteristics, the assembly of multiple variants of which results in an SCBA model configuration.

Chapter 4 Certification

4.1 General.

4.1.1 The process for certification of SCBA as being compliant with NFPA 1986 shall meet the requirements of Section 4.1, General; Section 4.2, Certification Program; Section 4.3, Inspections and Testing; Section 4.4, Recertification; Section 4.5, Manufacturers' Quality Assurance Program; Section 4.6, Hazards Involving Compliant Product; Section 4.7, Manufacturers' Investigation of Complaints and Returns; and Section 4.8, Manufacturers' Safety Alert and Product Recall Systems.

4.1.2 Prior to certification of SCBA to the requirements of this standard, the SCBA shall be NIOSH certified.

4.1.2.1 SCBA shall have NIOSH certification as positive pressure.

4.1.2.2 SCBA that are NIOSH certified as positive pressure but that are capable of supplying air to the user in a negative pressure demand-type mode shall not be certified to this standard.

4.1.3 SCBA and accessories that are certified as compliant with NFPA 1986 shall also be certified by NIOSH as compliant with the *Statement of Standard for NIOSH CBRN SCBA Testing*.

4.1.4 All SCBA that are labeled as being compliant with this standard shall meet or exceed all applicable requirements specified in this standard and shall be certified. This certification shall be in addition to, and shall not be construed to be the same as, the NIOSH certification specifically defined in 3.3.43.

4.1.5 All certification shall be performed by a certification organization that meets at least the requirements specified in Section 4.2, Certification Program, and that is accredited for personal protective equipment in accordance with ISO/IEC 17065, *Conformity assessment — Requirements for bodies certifying products, processes and services.*

4.1.6 Manufacturers shall not claim compliance with a portion(s) or segment(s) of the requirements of this standard and shall not use the name or identification of this standard, NFPA 1986, in any statements about their respective product(s) unless the product(s) is certified as compliant with this standard.

4.1.7 All compliant SCBA shall be listed by the certification organization, and the listing shall uniquely identify the certified product by, at a minimum, style or model number.

4.1.8 All compliant SCBA shall have a product label that meets the requirements specified in Chapter 5.

4.1.9 The certification organization's label, symbol, or identifying mark shall be attached to the product label, shall be part of the product label, or shall be immediately adjacent to the product label.

4.1.10 Reserved.

4.1.11 Reserved.

4.1.12 Reserved.

4.2 Certification Program.

4.2.1* The certification organization shall not be owned or controlled by manufacturers or vendors of the product being certified.

4.2.2 The certification organization shall be primarily engaged in certification work and shall not have a monetary interest in the product's ultimate profitability.

4.2.3 The certification organization shall be accredited for personal protective equipment in accordance with ISO/IEC 17065, *Conformity assessment – Requirements for bodies certifying products, processes and services*, and the accreditation shall be issued by an accreditation body operating in accordance with ISO/IEC 17011, *Conformity assessment — General requirements for accreditation bodies accrediting conformity assessment bodies.*

4.2.4 The certification organization shall refuse to certify products to this standard that do not comply with all applicable requirements of this standard.

4.2.5* The contractual provisions between the certification organization and the manufacturer shall specify that certification is contingent on compliance with all applicable requirements of this standard.

4.2.5.1 The certification organization shall not offer or confer any conditional, temporary, or partial certifications.

4.2.5.2 Manufacturers shall not be authorized to use any label or reference to the certification organization on products that are not compliant with all applicable requirements of this standard.

AVA Documents
Document Sharing Hub
Full document details: NFPA 1986 2017

4.2.6* The certification organization shall have laboratory facilities and equipment available for conducting proper tests to determine product compliance.

4.2.6.1 The certification organization laboratory facilities shall have a program in place and functioning for calibration of all instruments, and procedures shall be in use to ensure proper control of all testing.

4.2.6.2 The certification organization laboratory facilities shall follow good practice regarding the use of laboratory manuals, form data sheets, documented calibration and calibration routines, performance verification, proficiency testing, and staff qualification and training programs.

4.2.7 The certification organization shall require the manufacturer to establish and maintain a quality assurance program that meets the requirements of Section 4.5, Manufacturers' Quality Assurance Program.

4.2.7.1 The certification organization shall require the manufacturer to have a product recall system specified in Section 4.8, Manufacturers' Safety Alert and Product Recall Systems, as part of the manufacturer's quality assurance program.

4.2.7.2 The certification organization shall audit the manufacturer's quality assurance program to ensure that the quality assurance program provides continued product compliance with this standard.

4.2.8 The certification organization and the manufacturer shall evaluate any changes affecting the form, fit, or function of the compliant product to determine its continued certification to the 2017 edition of NFPA 1986.

4.2.8.1 Reserved.

4.2.8.2 Reserved.

4.2.9* The certification organization shall have a follow-up inspection program of the manufacturing facilities of the compliant product, with at least two random and unannounced visits per 12-month period to verify the product's continued compliance.

4.2.9.1 As part of the follow-up inspection program, the certification organization shall select sample product at random from the manufacturer's production line, the manufacturer's in-house stock, or the open market.

4.2.9.2 Sample product shall be evaluated by the certification organization to verify the product's continued compliance in order to ensure that the materials, components, and manufacturing quality assurance systems are consistent with the materials, components, and manufacturing quality assurance that were inspected and tested by the certification organization during initial certification and recertification.

4.2.9.3 The certification organization shall be permitted to conduct specific testing to verify the product's continued compliance.

4.2.9.4 For products, components, and materials for which prior testing, judgment, and experience of the certification organization have shown results to be in jeopardy of not complying with this standard, the certification organization shall conduct more frequent testing of sample product, components, and materials acquired in accordance with 4.2.9.1 against the applicable requirements of this standard.

4.2.10 The certification organization shall have in place a series of procedures, as specified in Section 4.6, Hazards Involving Compliant Product, that address report(s) of situation(s) in which a compliant product is subsequently found to be hazardous.

4.2.11 The certification organization's operating procedures shall provide a mechanism for the manufacturer to appeal decisions. The procedures shall include the presentation of information from both sides of a controversy to a designated appeals panel.

4.2.12 The certification organization shall be in a position to use legal means to protect the integrity of its name and label. The name and label shall be registered and legally defended.

4.3* Inspections and Testing.

4.3.1 For both certification and recertification of SCBA, the certification organization shall conduct both the inspection and the testing specified in this section.

4.3.2 All inspections, evaluations, conditioning, and testing for certification or recertification shall be conducted by a certification organization's testing laboratory that is accredited in accordance with the requirements of ISO/IEC 17025, *General requirements for the competence of testing and calibration laboratories.*

4.3.2.1 The certification organization's testing laboratory's scope of accreditation to ISO/IEC 17025, *General requirements for the competence of testing and calibration laboratories*, shall encompass testing of personal protective equipment.

4.3.2.2 The accreditation of a certification organization's testing laboratory shall be issued by an accreditation body operating in accordance with ISO/IEC 17011, *Conformity assessment — General requirements for accreditation bodies accrediting conformity assessment bodies.*

4.3.3 A certification organization shall be permitted to utilize conditioning and testing results conducted by a product or component manufacturer for certification or recertification provided the manufacturer's testing laboratory meets the requirements specified in 4.3.3.1 through 4.3.3.5.

4.3.3.1 The manufacturer's testing laboratory shall be accredited in accordance with the requirements of ISO/IEC 17025, *General requirements for the competence of testing and calibration laboratories.*

4.3.3.2 The manufacturer's testing laboratory's scope of accreditation to ISO/IEC 17025, *General requirements for the competence of testing and calibration laboratories*, shall encompass testing of personal protective equipment.

4.3.3.3 The accreditation of a manufacturer's testing laboratory shall be issued by an accreditation body operating in accordance with ISO/IEC 17011, *Conformity assessment — General requirements for accreditation bodies accrediting conformity assessment bodies.*

4.3.3.4 The certification organization shall approve the manufacturer's testing laboratory.

4.3.3.5 The certification organization shall determine the level of supervision and witnessing of the conditioning and testing for certification or recertification conducted at the manufacturer's testing laboratory.

AVA Documents 2017 Edition Document Sharing Hub

Full document details: NFPA 1986 2017

4.3.4 Sampling levels for testing and inspection shall be established by the certification organization and the manufacturer to ensure a reasonable and acceptable reliability at a reasonable and acceptable confidence level that products certified to this standard are compliant, unless such sampling levels are specified herein.

4.3.5 Inspection by the certification organization shall include a review of all product labels to ensure that all required label attachments, compliance statements, certification statements, and other product information are at least as specified for the SCBA in Section 5.1, Product Label Requirements.

4.3.6 Inspection by the certification organization shall include an evaluation of any symbols and pictorial graphic representations used on product labels or in user information, as permitted in 5.1.5, to ensure that the symbols are clearly explained in the product's user information package.

4.3.7 Inspection by the certification organization shall include a review of the user information required by Section 5.2, User Information, to ensure that the information has been developed and is available.

4.3.8 Inspection and evaluation by the certification organization for determining compliance with the design requirements specified in Chapter 6, Design Requirements, shall be performed on whole or complete products.

4.3.9 SCBA and SCBA components shall be subjected to the tests specified in Table 4.3.9 for each series.

4.3.10 SCBA shall be initially tested for certification and shall meet the performance requirements of three separate test series of Categories A, B, C, D, and E, as specified in Table 4.3.9. All tests within Categories A, B, C, D, and E, which are designed as cumulative damage tests, shall be conducted in the order specified.

4.3.11 SCBA lens components shall be initially tested for certification and shall meet the performance requirements of one test series of Category F, as specified in Table 4.3.9. SCBA component testing in Category F shall be conducted on test specimens as specified in the respective test method.

4.3.12 After certification, compliant SCBA and components of compliant SCBA shall be tested annually within 12 months of previous tests and shall meet the performance requirements of one test series of Categories A, B, C, D, E, and F, as specified in Table 4.3.9.

Table 4.3.9 Test Series

Test Order	Category A (SCBA #1)	Category B (SCBA #2)	Category C (SCBA #3)	Category D (SCBA #4)	Category E (SCBA #5)	Category F (SCBA #6)
1	Airflow *(Section 8.1)*	Airflow *(Section 8.1)*	Airflow *(Section 8.1)*	Airflow *(Section 8.1)*	Low power capacity *(Section 8.22)*	Facepiece lens abrasion (*Section 8.6*)
2	Facepiece carbon dioxide content *(Section 8.9)*	Breathing air cylinder and valve assembly retention *(Section 8.18)*	EOSTI recognition *(Section 8.10)*	Flame *(Section 8.8)*	Immersion leakage *(Section 8.19)*	
3	Nonelectronic communications *(Section 8.7)*	Cylinder connections and accessibility *(Section 8.20)*	HUD visibility *(Section 8.13 through 8.15)*	—	—	—
4	Supplementary voice communications system *(Section 8.21)*	RIC UAC cylinder refill breathing *(Section 8.16)*	HUD low power source visual alert signal *(Section 8.12)*	—	—	—
5	Environmental temperature *(Section 8.2)*	RIC UAC system fill rate *(Section 8.17)*	HUD wiring connection strength *(Section 8.11)*	—	—	—
6	EBSS cold temperature* *(Section 8.23)*	EBSS cold temperature* *(Section 8.23)*	Vibration *(Section 8.3)*	—	—	—
7	Particulate *(Section 8.5)*	Accelerated corrosion *(Section 8.4)*	—	—	—	—

*To be tested together.

Documents
Document Sharing Hub
Full document details: NFPA 1986 2017

4.3.13 A minimum of five identical SCBA that are to be certified to this standard shall be selected from the manufacturer's production.

4.3.14 The first SCBA shall be subjected to the tests listed in Category A, the second SCBA shall be subjected to the tests listed in Category B, the third SCBA shall be subjected to the tests in Category C, the fourth SCBA shall be subjected to the tests in Category D, and the fifth SCBA shall be subjected to the tests in Category E, as shown in Table 4.3.9.

4.3.15 Components from SCBA that are to be certified to this standard shall be subjected to the tests specified in Category F of Table 4.3.9. SCBA component testing in Category F shall be conducted on test specimens as specified in each respective test method.

4.3.16 The requirement specified in 4.3.12 shall be waived every fifth year when the testing required by 4.3.17 is conducted.

4.3.17 Compliant SCBA shall be tested and shall meet the performance requirements of three separate test series of Categories A, B, C, D, and E, as specified in Table 4.3.9, every fifth year from the date of the initial certification testing specified in 4.3.10.

4.3.18 SCBA lens components shall be tested and shall meet the performance requirements of one test series of Category F, as specified in Table 4.3.9, every fifth year from the date of the initial certification testing specified in 4.3.10. SCBA component testing in Category F shall be conducted on test specimens as specified in each respective test method.

4.3.19 The certification organization shall not allow any modifications, pretreatment, conditioning, or other such special processes of the product or any product component prior to the product's submission for evaluation and testing by the certification organization.

4.3.19.1 The certification organization shall accept from the manufacturer for evaluation and testing for certification only product or product components that are the same in every respect to the actual final product or product component.

4.3.19.2 The certification organization shall not allow the substitution, repair, or modification, other than as specifically permitted herein, of any product or any product component during testing.

4.3.20 No adjustment, repair, or replacement of parts shall be permitted to any SCBA being tested in accordance with this standard; however, breathing air cylinders shall be permitted to be filled as required.

4.3.21 Where SCBA are provided with an accessory or accessories that are certified by NIOSH in accordance with 42 CFR 84 for that specific SCBA, the SCBA with accessories installed shall be tested to all of the performance requirements specified in Chapter 7, and the accessories shall not cause degradation of the performance of the SCBA. The accessories themselves shall not be required to pass the performance testing unless specifically specified herein.

4.3.22 After completion of these tests for a specific model SCBA or its variant, only those tests on other similar SCBA models or variants shall be required where, in the determination of the certification organization, the SCBA's test results can be affected by any components or NIOSH-certified accessories that are different from those on the original SCBA tested.

4.3.23 Any modifications made to an SCBA or to any NIOSH-certified accessories provided for an SCBA by the SCBA manufacturer after certification shall require retesting and the meeting of the performance requirements of all those individual tests that the certification organization determines could be affected by such changes. This retesting shall be conducted before the modified SCBA is certified as being compliant with this standard.

4.3.24 The manufacturer shall maintain all design and performance inspection and test data from the certification organization used in the certification of the manufacturer's compliant product. The manufacturer shall provide such data, upon request, to the purchaser or authority having jurisdiction.

4.4 Recertification.

4.4.1 All SCBA models that are labeled as being compliant with this standard shall undergo recertification on an annual basis.

4.4.2 Recertification shall include inspection and evaluation to all design requirements and testing to all performance requirements as required by 4.3.8 and 4.3.12 on all manufacturer models and components.

4.4.3 The manufacturer shall maintain all design and performance inspection and test data from the certification organization used in the recertification of manufacturer models and components and shall provide such data, upon request, to the purchaser or authority having jurisdiction.

4.4.4 It is permissible for product to be manufactured for the follow-up inspection program to ensure correct configuration is available at the request of the certification organization. These samples shall be selected at random from a product completed on the manufacturer's production line.

4.5 Manufacturers' Quality Assurance Programs

4.5.1 The manufacturer shall provide and operate a quality assurance program that meets the requirements of this section and that includes a product recall system as specified in 4.2.7.1 and Section 4.8, Manufacturers' Safety Alert and Product Recall Systems.

4.5.2 The operation of the quality assurance program shall evaluate and test compliant product production to the requirements of this standard to ensure that production remains in compliance.

4.5.3 The manufacturer shall be registered to ISO 9001, *Quality management systems — Requirements.*

4.5.3.1 Registration to the requirements of ISO 9001, *Quality management systems — Requirements,* shall be conducted by a registrar that is accredited for personal protective equipment.

4.5.3.2 Registrars specified in 4.5.3.1 shall be accredited for personal protective equipment in accordance with ISO/IEC 17021, *Conformity assessment — Requirements for bodies providing audit and certification of management systems.*

4.5.4* Any entity that does not manufacture or assemble the compliant product but meets the definition of *manufacturer* as specified in 3.3.36 and therefore is considered to be the

AVA Documents 2017 Edition Document Sharing Hub

Full document details: NFPA 1986 2017

"manufacturer" shall meet the requirements specified in Section 4.5, Manufacturers' Quality Assurance Programs.

4.5.5* Where the manufacturer uses subcontractors in the construction or assembly of the compliant product, the locations and names of all subcontractor facilities shall be documented, and the documentation shall be provided to the manufacturer's ISO registrar and the certification organization.

4.6 Hazards Involving Compliant Product.

4.6.1* The certification organization shall establish procedures to be followed where situation(s) are reported in which a compliant product is subsequently found to be hazardous. These procedures shall comply with the provisions of ISO Guide 27, *Guidelines for corrective action to be taken by a certification body in the event of misuse of its mark of conformity*, and as modified herein.

4.6.2* Where a report of a hazard involved with a compliant product is received by the certification organization, the certification organization shall contact NIOSH National Personal Protective Technology Laboratory (NIOSH/NPPTL), and the validity of the report shall be investigated following the procedures established by NIOSH/NPPTL.

4.6.3 With respect to a compliant product, a hazard shall be a condition or create a situation that results in exposing life, limb, or property to an imminently dangerous or dangerous condition.

4.6.4 Where a specific hazard is identified, the determination of the appropriate action for the manufacturer to undertake shall take into consideration the severity of the hazard and its consequences to the safety and health of users.

4.6.5 Where it is established that a hazard is involved with a compliant product, the certification organization, in coordination with NIOSH/NPPTL, shall determine the scope of the hazard, including products, model numbers, serial numbers, factory production facilities, production runs, and quantities involved.

4.6.6 The investigation shall include but not be limited to the extent and scope of the problem as it might apply to other compliant product or compliant product components manufactured by other manufacturers or certified by other certification organizations.

4.6.7 The certification organization, in coordination with NIOSH/NPPTL, shall also investigate reports of a hazard where compliant product is gaining widespread use in applications not foreseen when the standard was written, such applications in turn being ones for which the product was not certified, and no specific scope of application has been provided in the standard, and no limiting scope of application was provided by the manufacturer in written material accompanying the compliant product at the point of sale.

4.6.8 The certification organization, in coordination with NIOSH/NPPTL, shall require the manufacturer of the compliant product or the manufacturer of the compliant product component, if applicable, to assist the certification organization and NIOSH/NPPTL in the investigation and to conduct its own investigation as specified in Section 4.7, Manufacturers' Investigation of Complaints and Returns.

4.6.9 Where the facts indicating a need for corrective action are conclusive and the manufacturer has exhausted all appeal rights, the certification organization, in coordination with NIOSH/NPPTL, shall initiate corrective action immediately, provided there is a manufacturer to be held responsible for such action.

4.6.10 Where the facts are conclusive and corrective action is indicated, but there is no manufacturer to be held responsible, such as when the manufacturer has gone out of business or is bankrupt, the certification organization, in coordination with NIOSH/NPPTL, shall immediately notify relevant governmental and regulatory agencies and issue a notice to the user community about the hazard.

4.6.11* Where the facts are conclusive and corrective action is indicated, the certification organization, in coordination with NIOSH/NPPTL, shall take one or more of the following corrective actions:

(1) Parties authorized and responsible for issuing a safety alert shall be notified when, in the opinion of the certification organization and NIOSH/NPPTL, such a safety alert is necessary to inform the users.
(2) Parties authorized and responsible for issuing a product recall shall be notified when, in the opinion of the certification organization and NIOSH/NPPTL, such a recall is necessary to protect the users.
(3) The mark of certification shall be removed from the product.
(4) Where a hazardous condition exists and it is not practical to implement 4.6.11(1), 4.6.11(2), or 4.6.11(3), or the responsible parties refuse to take corrective action, the certification organization, in coordination with NIOSH/NPPTL, shall notify relevant governmental and regulatory agencies and issue a notice to the user community about the hazard.

4.6.12 The certification organization, in coordination with NIOSH/NPPTL, shall provide a report to the organization or individual identifying the reported hazardous condition and notify that organization or individual of the corrective action indicated or that no corrective action is indicated.

4.7 Manufacturers' Investigations of Complaints and Returns.

4.7.1 Manufacturers shall provide corrective action in accordance with ISO 9001, *Quality management systems — Requirements*, for investigating written complaints and returned products.

4.7.2 Manufacturers' records of returns and complaints related to safety issues shall be retained for at least 5 years.

4.7.3 Where the manufacturer discovers, during the review of specific returns or complaints, that a compliant product or compliant product component can constitute a potential safety risk to end users and is possibly subject to a safety alert or product recall, the manufacturer shall immediately contact NIOSH/NPPTL and the certification organization and provide all information about its review to assist NIOSH/NPPTL and the certification organization with their investigation.

4.8 Manufacturers' Safety Alert and Product Recall Systems.

4.8.1 Manufacturers shall establish a written safety alert system and a written product recall system that describes the procedures to be used in the event that they decide or are directed by the certification organization or NIOSH/NPPTL to either issue a safety alert or conduct a product recall.

Documents
Document Sharing Hub
Full document details: NFPA 1986 2017

4.8.2 The manufacturers' safety alert and product recall systems shall provide the following:

(1) The establishment of a coordinator and responsibilities by the manufacturer for the handling of safety alerts and product recalls
(2) A method of notifying all dealers, distributors, purchasers, users, and the National Fire Protection Association (NFPA) about the safety alert or product recall that can be initiated within a 1-week period following the manufacturer's decision to issue a safety alert or conduct a product recall or after the manufacturer has been directed by NIOSH/NPPTL or the certification organization to issue a safety alert or conduct a product recall
(3) Techniques for communicating accurately and understandably the nature of the safety alert or product recall and, in particular, the specific hazard or safety issue found to exist
(4) Procedures for removing product that is recalled and for documenting the effectiveness of the product recall
(5) A plan for repairing, replacing, or compensating purchasers for returned product

Chapter 5 Labeling and Information

5.1 Product Label Requirements.

5.1.1 In addition to the NIOSH certification label, each SCBA shall have an SCBA product label, which shall be permanently and conspicuously attached to the SCBA.

5.1.2 Multiple label pieces shall be permitted in order to carry all statements and information required to be on the SCBA product label; however, all label pieces of the product label shall be located adjacent to each other.

5.1.3 The certification organization's label, symbol, or identifying mark shall be attached to both the NIOSH certification label and the SCBA product label or be part of the product labels and shall be placed in a conspicuous location. All letters shall be at least 2.5 mm (3/32 in.) in height, and the label, symbol, or identifying mark shall be at least 6 mm (15/64 in.) in height.

5.1.4 All worded portions of both required product labels shall be at least in English.

5.1.5 Symbols and other pictorial graphic representations shall be permitted to be used to supplement worded statements on the product label(s).

5.1.6 The SCBA product label shall bear the following compliance statement legibly printed, and all letters and numbers shall be at least 2 mm in height:

THIS SCBA MEETS THE REQUIREMENTS OF NFPA 1986, STANDARD ON RESPIRATORY PROTECTION EQUIPMENT FOR TACTICAL AND TECHNICAL OPERATIONS, 2017 EDITION.
DO NOT REMOVE THIS LABEL

5.1.7 SCBA components, as listed on the NIOSH certification labels, shall be marked where practicable directly on the component with the lot number, serial number, or year and month of manufacture.

5.2 User Information.

5.2.1 The SCBA manufacturer shall provide with each SCBA at least the information and training materials specified in Section 5.2, User Information.

5.2.2 Upon request at the time of purchase, the SCBA manufacturer shall provide to the purchaser an information sheet with each SCBA that documents at least the following:

(1) Manufacturer name and address
(2) Manufacturing performance tests conducted at time of manufacture and the results
(3) Date of manufacture
(4) Model number
(5) Serial number
(6) Lot number, if applicable
(7) Hydrostatic test dates and results, if applicable

5.2.3 Information or training materials regarding pre-use shall be provided at least on the following areas:

(1) Safety considerations
(2) Limitations of use
(3) Charging breathing air cylinders
(4) Breathing air quality in accordance with NFPA 1989
(5) Marking recommendations and restrictions
(6) Warranty information
(7) Recommended storage practices
(8) Mounting on/in vehicles

5.2.4 Information or training materials regarding periodic inspections shall be provided at least on inspection frequency and details.

5.2.5 Information or training materials regarding donning and doffing shall be provided at least on the following areas:

(1) Donning and doffing procedures
(2) Adjustment procedures
(3) Interface issues

5.2.6* Information or training materials regarding use shall be provided at least on the following areas:

(1) Pre-use checks
(2) Recharging breathing air cylinders
(3) Emergency procedures to be followed in the event of damage, malfunction, or failure of the breathing apparatus
(4) Emergency procedures to be followed in the event of an out-of-air situation

5.2.7* Information or training materials regarding periodic maintenance and cleaning shall be provided at least on the following areas:

(1) Cleaning instructions and precautions
(2) Disinfecting procedures
(3) Maintenance frequency and details
(4) Methods of repair, where applicable
(5) Low power source signals and power source replacement, where applicable
(6) Complete instructions for reporting to the manufacturer, certification organization, and NIOSH/NPPTL all returned equipment or complaints of damage, malfunction, or failure of the breathing apparatus that could present a hazard to the user

AVA Documents 2017 Edition Document Sharing Hub
Full document details: NFPA 1986 2017

5.2.8 Information or training materials regarding retirement shall be provided at least on replacement/retirement considerations.

5.2.9 The SCBA manufacturer shall provide the manufacturer's specified component service life for composite breathing air cylinders and for all elastomeric components of the SCBA. This information shall be included at least in the maintenance information provided to the users.

Chapter 6 Design Requirements

6.1 General Design Requirements.

6.1.1 SCBA shall meet the applicable design requirements specified in this chapter where inspected and evaluated by the certification organization as specified in Section 4.3, Inspections and Testing.

6.1.2 Prior to certification of SCBA to the requirements of this standard, SCBA shall be NIOSH certified in accordance with 42 CFR 84.

6.1.2.1 SCBA shall have NIOSH pressure-demand certification.

6.1.2.2 SCBA that are NIOSH pressure-demand certified but capable of supplying air to the user in a negative pressure demand-type mode shall not be certified to this standard.

6.1.3 SCBA that are certified as compliant with NFPA 1986 shall also be certified by NIOSH as compliant with the *Statement of Standard for NIOSH CBRN SCBA Testing*.

6.1.4 SCBA shall consist of all the components necessary for NIOSH certification in accordance with 42 CFR 84 and any additional components necessary to meet the requirements of this standard.

6.1.5 In addition to the cylinder-mounted breathing air pressure gauge, all SCBA shall have another breathing air pressure gauge that shall be capable of being viewed by the wearer when the SCBA is worn in accordance with the SCBA manufacturer's instructions.

6.1.5.1 A heads-up display (HUD) shall not be the sole device used to meet the requirements of 6.1.5.

6.1.6 The pressure gauge provided as part of the SCBA manufacturer's breathing air cylinder and valve assembly shall be readable by a person other than the wearer of the SCBA when the SCBA is worn in accordance with the SCBA manufacturer's instructions and with the breathing air cylinder securely retained in the SCBA backframe/carrier.

6.1.7 All SCBA shall be equipped with a facepiece that covers, at a minimum, the wearer's eyes, nose, and mouth.

6.1.8 All electric circuits integral to an SCBA or to any SCBA accessories shall be certified to the requirements for Class I, Groups C and D; Class II, Groups E, F, and G, Division 1 hazardous locations specified in ANSI/UL 913, *Standard for Intrinsically Safe Apparatus and Associated Apparatus for Use in Class I, II, and III, Division 1 Hazardous (Classified) Locations*.

6.1.9 All hardware, brackets, and snaps or other fasteners of SCBA or any NIOSH-certified accessories shall be free of rough spots, burrs, and sharp edges.

6.1.10 All SCBA shall have a voice communications capability that shall consist of a nonelectronic transmission system.

6.1.10.1 If the SCBA incorporates an optional electronic supplementary voice communications system, the supplementary voice communications system design shall incorporate an indication that the system has been activated.

6.1.10.2 The optional supplementary voice communications system's power source shall at a minimum provide upon activation an alert signal indicating low power capacity.

6.1.10.3 The optional supplementary voice communications system shall be designed to be switched on and off manually without the performance of the SCBA being affected.

6.1.10.4 Where the optional supplementary voice communications system is automatically activated, the operation of the on/off control shall override the auto activation of the supplementary voice communications system without affecting the performance of the SCBA.

6.2 End-of-Service-Time Indicator (EOSTI) Design Requirements.

6.2.1 All SCBA shall be equipped with a minimum of one EOSTI.

6.2.2 The EOSTI(s) shall be activated with no additional procedures than those required to activate the SCBA breathing system.

6.2.3 The EOSTI(s) shall meet the activation requirements of NIOSH certification as specified in 42 CFR 84.

6.2.4 Each EOSTI shall consist of at least the following:

(1) A sensing mechanism
(2) A signaling device

6.2.4.1 The sensing mechanism of the EOSTI(s) shall activate the signaling device(s).

6.2.4.2 The EOSTI(s) signaling devices shall provide notification to the SCBA user of the activation of the EOSTI by stimulating one or more human senses.

6.2.4.3 The EOSTI(s) shall be permitted to have more than one signaling device, and each signaling device shall be permitted to stimulate more than one human sense.

6.2.5 A failure mode and effects analysis shall be provided to the certification organization for the EOSTI(s).

6.2.5.1 The failure mode and effects analysis shall identify each potential failure mode for each component necessary for the EOSTI(s) to function.

6.2.5.2 For purposes of the failure mode and effects analysis, power sources other than the air from the SCBA breathing air cylinder shall be considered as part of the EOSTI(s).

6.2.6 The EOSTI alarm shall activate at 25 percent +4/–0 percent of full cylinder pressure.

6.3 Optional HUD Design Requirements.

6.3.1 The SCBA shall be permitted to be equipped with at least one heads-up display.

6.3.2 If the SCBA is equipped with a HUD, the HUD shall be activated with no additional procedures other than those required to activate the SCBA breathing system.

AVA Documents
Document Sharing Hub
Full document details: NFPA 1986 2017

6.3.2.1 The HUD shall be permitted to be capable of being user controlled following activation.

6.3.2.1.1 User control function(s) shall include, but not be limited to, deactivation of the HUD visual pressure gauge display function.

6.3.2.2 If the HUD is used as the EOSTI, the EOSTI indication shall not be capable of being disabled.

6.3.2.3 The activation/deactivation of the HUD shall be performed external to the facepiece, and the user shall be able to operate the HUD without having to use special tools.

6.3.3 Each time the SCBA breathing system is activated with the breathing air cylinder pressure of 20 bar (290 psi) or greater, the HUD shall provide a visual indication of activation.

6.3.4 Where the HUD is provided with an external wiring disconnect, the wiring connector shall require two distinct actions for disconnection.

6.3.5 The HUD shall provide at least visual displays of alert signals and information.

6.3.6 All HUD visual displays shall be visible to the SCBA wearer with the SCBA and facepiece properly donned and regardless of the wearer's head movement.

6.3.7 The HUD shall not use color as the only means of differentiating between alert signal displays and informational displays.

6.3.8 Visual Alert Signals (when in the active mode).

6.3.8.1 The HUD shall display visual alert signals for breathing air cylinder content specified in 6.3.8.4.

6.3.8.2 In addition to the mandatory visual alert signals specified in 6.3.8.4, additional visual alert signals to indicate when other status or conditions have occurred shall be permitted.

6.3.8.3 Each visual alert signal shall be identifiable, by the SCBA wearer, from any other visual alert signals or other informational displays provided on the HUD or on the SCBA.

6.3.8.4 The HUD shall display a visual alert signal for breathing air cylinder content when the breathing air in the SCBA cylinder has been reduced to 50 percent of rated service content. This visual alert signal shall visibly flash at a frequency of not less than one per second for a minimum of 20 consecutive seconds.

6.3.9 Visual Informational Displays (when in the active mode).

6.3.9.1 The HUD shall display visual informational signals for at least breathing air cylinder content as specified in 6.3.9.5.

6.3.9.2 In addition to the mandatory visual informational signal specified in 6.3.9.5 additional visual informational signals to indicate when other status or conditions have occurred shall be permitted.

6.3.9.3 All visual displays of information shall be permitted to flash at a frequency of not less than one per second for a minimum of 10 consecutive seconds every 60 seconds.

6.3.9.4 Where the visual display is not constantly visible or is not visible for at least 10 consecutive seconds every 60 seconds, the HUD shall be provided with a manual activation of the display.

6.3.9.5 The HUD shall display a visual informational signal for breathing air cylinder content at 100 percent, 75 percent, 50 percent, and 25 percent of the cylinder's total rated service content.

6.3.9.5.1 The range of pressures under the EOSTI set point shall be visually obvious.

6.3.9.5.1.1 Where a gauge analog is used, the sub-EOSTI pressure range shall have a red background.

6.3.9.5.1.2 Where an electronic mode is used, the sub-EOSTI display of pressure shall flash at a frequency of not less than one per second for the remaining duration of the cylinder.

6.3.9.6 A display only in units of pressure shall not be permitted.

6.4* Optional Rapid Intervention Crew/Company Universal Air Connection (RIC UAC) Design Requirements.

6.4.1 The SCBA shall be permitted to be equipped with an RIC UAC male fitting to allow replenishment of breathing air to the SCBA breathing air cylinder.

6.4.2 If the SCBA is equipped with an RIC UAC, the RIC UAC male fitting shall meet the requirements specified in 6.4.4 and shall be located on each SCBA in a permanently fixed position.

6.4.2.1 The distance between the leading edge of the Compressed Gas Association (CGA) fitting at the outlet of the SCBA cylinder valve and the leading edge of the RIC UAC male fitting shall be a maximum of 100 mm (4 in.).

6.4.3 If the SCBA is equipped with an RIC UAC, a separate self-resetting relief valve shall be installed on the SCBA to protect the SCBA against overpressurization.

6.4.4 RIC UAC Male Fitting.

6.4.4.1 The RIC UAC male fitting shall be designed as specified in Figure 6.4.4.1.

6.4.4.2 The RIC UAC male fitting shall be capable of connecting to any RIC UAC female fitting.

6.4.4.3 The RIC UAC male fitting shall not interfere with any other operation of the SCBA.

6.4.4.4 RIC UAC male fittings shall be equipped with a dust cap or sealing plug to prevent dust, dirt, and debris from entering the fitting and to serve as a leakproof seal.

6.4.5 RIC UAC Female Fitting.

6.4.5.1 The RIC UAC female fitting shall be designed as specified in Figure 6.4.5.1.

6.4.5.2 The RIC UAC female fitting shall be capable of connecting to all RIC UAC male fittings.

6.4.5.3 RIC UAC female fittings shall be equipped with a dust cap or sealing plug to prevent dust, dirt, and debris from entering the fitting and to serve as a leakproof seal.

6.4.6 RIC UAC Filling Hose Assembly.

6.4.6.1 Each SCBA manufacturer shall make available an RIC UAC filling hose assembly that consists of a filling hose and an RIC UAC female fitting.

AVA Documents 2017 Edition Document Sharing Hub

Full document details: NFPA 1986 2017

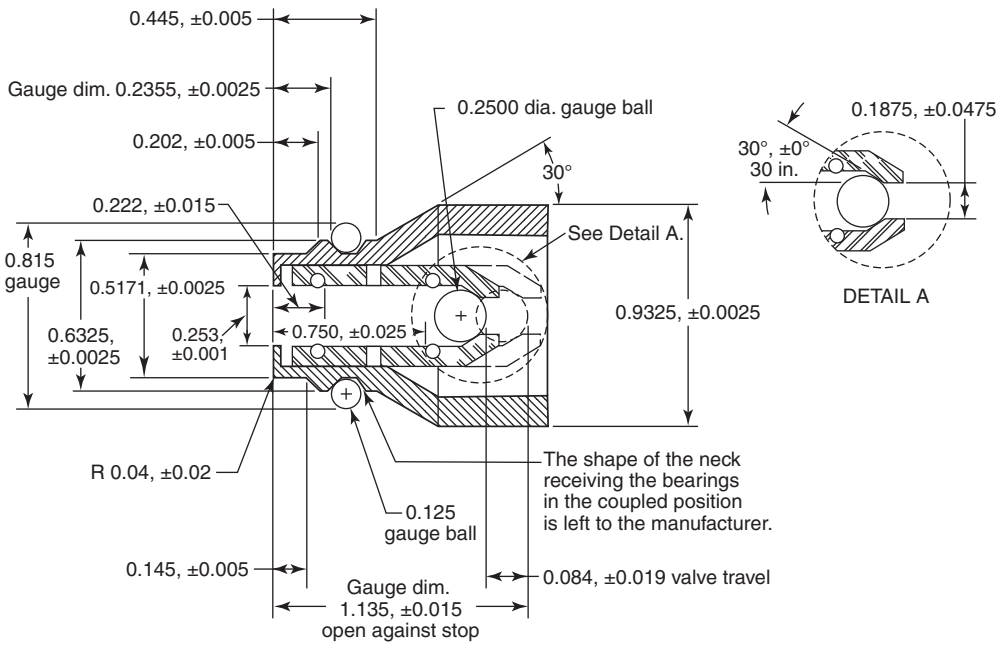

FIGURE 6.4.4.1 RIC UAC Male Fitting (all measurements in inches).

6.4.6.2 The RIC UAC filling hose assembly shall be, at a minimum, a high-pressure, 310 bar (4500 psi) assembly designed to replenish breathing air to an SCBA breathing air cylinder.

6.4.6.3 The filling hose shall have an RIC UAC female fitting that meets the requirements specified in 6.4.5 attached to the delivery end.

6.4.7 RIC UAC Coupling.

6.4.7.1 The complete RIC UAC male and female fittings shall constitute the RIC UAC coupling.

6.4.7.2 The RIC UAC coupling shall be capable of connection and disconnection with one hand while subjected to maximum operation pressure.

6.4.7.3 The RIC UAC coupling shall have an operating pressure of at least 310 bar (4500 psi).

6.5 Power Source Design Requirements.

6.5.1 Where the SCBA is equipped with a power source for electronics, it shall be either a single dedicated source for one device or a common power source for multiple devices.

6.5.2 Where all electronic devices that are part of the SCBA share a common power source, at least one low power source alert signal shall be provided.

6.5.3 Where multiple but not all electronic devices that are part of the SCBA share a common power source, a low power source alert signal shall be located on each of those electronic devices supplied by the common power source and positioned on each of those electronic devices where it will be detected upon device activation with the electronic device mounted in its permanent position on the SCBA.

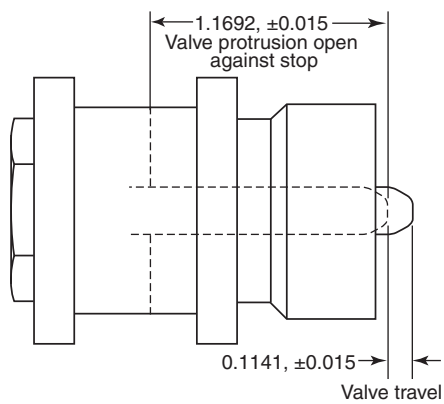

FIGURE 6.4.5.1 RIC UAC Female Fitting (all measurements in inches).

6.5.4 Where an electronic device uses a single, dedicated power source, the low power source alert signal shall be located on the electronic device and positioned where it will be detected upon device activation with the electronic device mounted in its permanent position on the SCBA.

6.5.5 Where a HUD display of low power source alert signal(s) specified in 6.5.2 is visual, the low power source alert signal(s) shall be positioned within the user's field of vision with the SCBA facepiece properly donned.

6.5.6 Where a power source is used for HUD to comply with the requirements of this standard, HUD shall provide an alert signal for low power source capacity when the remaining power source life will provide a minimum of 2 hours of operation of the HUD at maximum electrical draw.

Documents
Document Sharing Hub
Full document details: NFPA 1986 2017