NFPA®

225

Model Manufactured Home Installation Standard

2017

NFPA®

AVA Documents
Document Sharing Hub

Full document details: NFPA 225 2017

IMPORTANT NOTICES AND DISCLAIMERS CONCERNING NFPA® STANDARDS

NOTICE AND DISCLAIMER OF LIABILITY CONCERNING THE USE OF NFPA STANDARDS

NFPA® codes, standards, recommended practices, and guides ("NFPA Standards"), of which the document contained herein is one, are developed through a consensus standards development process approved by the American National Standards Institute. This process brings together volunteers representing varied viewpoints and interests to achieve consensus on fire and other safety issues. While the NFPA administers the process and establishes rules to promote fairness in the development of consensus, it does not independently test, evaluate, or verify the accuracy of any information or the soundness of any judgments contained in NFPA Standards.

The NFPA disclaims liability for any personal injury, property or other damages of any nature whatsoever, whether special, indirect, consequential or compensatory, directly or indirectly resulting from the publication, use of, or reliance on NFPA Standards. The NFPA also makes no guaranty or warranty as to the accuracy or completeness of any information published herein.

In issuing and making NFPA Standards available, the NFPA is not undertaking to render professional or other services for or on behalf of any person or entity. Nor is the NFPA undertaking to perform any duty owed by any person or entity to someone else. Anyone using this document should rely on his or her own independent judgment or, as appropriate, seek the advice of a competent professional in determining the exercise of reasonable care in any given circumstances.

The NFPA has no power, nor does it undertake, to police or enforce compliance with the contents of NFPA Standards. Nor does the NFPA list, certify, test, or inspect products, designs, or installations for compliance with this document. Any certification or other statement of compliance with the requirements of this document shall not be attributable to the NFPA and is solely the responsibility of the certifier or maker of the statement.

REMINDER: UPDATING OF NFPA STANDARDS

Users of NFPA codes, standards, recommended practices, and guides ("NFPA Standards") should be aware that NFPA Standards may be amended from time to time through the issuance of Tentative Interim Amendments or corrected by Errata. An official NFPA Standard at any point in time consists of the current edition of the document together with any Tentative Interim Amendment and any Errata then in effect.

In order to determine whether an NFPA Standard has been amended through the issuance of Tentative Interim Amendments or corrected by Errata, visit the "Codes & Standards" section on NFPA's website. There, the document information pages located at the "List of NFPA Codes & Standards" provide up-to-date, document-specific information including any issued Tentative Interim Amendments and Errata.

To view the document information page for a specific Standard, go to http://www.nfpa.org/docinfo to choose from the list of NFPA Standards or use the search feature to select the NFPA Standard number (e.g., NFPA 101). The document information page includes postings of all existing Tentative Interim Amendments and Errata. It also includes the option to register for an "Alert" feature to receive an automatic email notification when new updates and other information are posted regarding the document.

ISBN: 978-145591562-0 (Print)
ISBN: 978-145591563-7 (PDF)

AVA Documents
Document Sharing Hub

Full document details: NFPA 225 2017

IMPORTANT NOTICES AND DISCLAIMERS CONCERNING NFPA® STANDARDS

ADDITIONAL NOTICES AND DISCLAIMERS

Updating of NFPA Standards

Users of NFPA codes, standards, recommended practices, and guides ("NFPA Standards") should be aware that these documents may be superseded at any time by the issuance of new editions or may be amended from time to time through the issuance of Tentative Interim Amendments or corrected by Errata. An official NFPA Standard at any point in time consists of the current edition of the document together with any Tentative Interim Amendments and any Errata then in effect. In order to determine whether a given document is the current edition and whether it has been amended through the issuance of Tentative Interim Amendments or corrected through the issuance of Errata, consult appropriate NFPA publications such as the National Fire Codes® Subscription Service, visit the NFPA website at www.nfpa.org, or contact the NFPA at the address listed below.

Interpretations of NFPA Standards

A statement, written or oral, that is not processed in accordance with Section 6 of the Regulations Governing the Development of NFPA Standards shall not be considered the official position of NFPA or any of its Committees and shall not be considered to be, nor be relied upon as, a Formal Interpretation.

Patents

The NFPA does not take any position with respect to the validity of any patent rights referenced in, related to, or asserted in connection with an NFPA Standard. The users of NFPA Standards bear the sole responsibility for determining the validity of any such patent rights, as well as the risk of infringement of such rights, and the NFPA disclaims liability for the infringement of any patent resulting from the use of or reliance on NFPA Standards.

NFPA adheres to the policy of the American National Standards Institute (ANSI) regarding the inclusion of patents in American National Standards ("the ANSI Patent Policy"), and hereby gives the following notice pursuant to that policy:

NOTICE: The user's attention is called to the possibility that compliance with an NFPA Standard may require use of an invention covered by patent rights. NFPA takes no position as to the validity of any such patent rights or as to whether such patent rights constitute or include essential patent claims under the ANSI Patent Policy. If, in connection with the ANSI Patent Policy, a patent holder has filed a statement of willingness to grant licenses under these rights on reasonable and nondiscriminatory terms and conditions to applicants desiring to obtain such a license, copies of such filed statements can be obtained, on request, from NFPA. For further information, contact the NFPA at the address listed below.

Law and Regulations

Users of NFPA Standards should consult applicable federal, state, and local laws and regulations. NFPA does not, by the publication of its codes, standards, recommended practices, and guides, intend to urge action that is not in compliance with applicable laws, and these documents may not be construed as doing so.

Copyrights

NFPA Standards are copyrighted. They are made available for a wide variety of both public and private uses. These include both use, by reference, in laws and regulations, and use in private self-regulation, standardization, and the promotion of safe practices and methods. By making these documents available for use and adoption by public authorities and private users, the NFPA does not waive any rights in copyright to these documents.

Use of NFPA Standards for regulatory purposes should be accomplished through adoption by reference. The term "adoption by reference" means the citing of title, edition, and publishing information only. Any deletions, additions, and changes desired by the adopting authority should be noted separately in the adopting instrument. In order to assist NFPA in following the uses made of its documents, adopting authorities are requested to notify the NFPA (Attention: Secretary, Standards Council) in writing of such use. For technical assistance and questions concerning adoption of NFPA Standards, contact NFPA at the address below.

For Further Information

All questions or other communications relating to NFPA Standards and all requests for information on NFPA procedures governing its codes and standards development process, including information on the procedures for requesting Formal Interpretations, for proposing Tentative Interim Amendments, and for proposing revisions to NFPA standards during regular revision cycles, should be sent to NFPA headquarters, addressed to the attention of the Secretary, Standards Council, NFPA, 1 Batterymarch Park, P.O. Box 9101, Quincy, MA 02269-9101; email: stds_admin@nfpa.org.

For more information about NFPA, visit the NFPA website at www.nfpa.org. All NFPA codes and standards can be viewed at no cost at www.nfpa.org/docinfo.

AVA Documents
Document Sharing Hub

Full document details: NFPA 225 2017

Copyright © 2016 National Fire Protection Association®. All Rights Reserved.

NFPA® 225

Model Manufactured Home Installation Standard

2017 Edition

This edition of NFPA 225, *Model Manufactured Home Installation Standard*, was prepared by the Technical Committee on Manufactured Housing. It was issued by the Standards Council on November 11, 2016, with an effective date of December 1, 2016, and supersedes all previous editions.

This edition of NFPA 225 was approved as an American National Standard on December 1, 2016.

Origin and Development of NFPA 225

The first edition of NFPA 225 was developed as a result of numerous actions that led to NFPA being further involved in manufactured housing regulatory issues. First, it should be noted that the previous responsibility for management of the ANSI standard for this subject was with the National Conference of States on Building Codes and Standards (NCSBCS). Their 1994 document, NCSBCS A 225.1, *Manufactured Home Installations*, formed the basis for the first edition of NFPA 225. In 2000, an agreement in principle was reached between NCSBCS and NFPA that would allow transfer of the ANSI standard to NFPA. It was a logical move, since an installation standard would use the basic criteria of the manufactured housing standard, as contained in NFPA 501, *Standard on Manufactured Housing*, for a completed unit to be efficiently, effectively, safely, and adequately installed.

The second area that highlighted the need for the installation standard was passage of the Manufactured Housing Improvement Act (MHIA) of 2000. Although the MHIA was not implemented until 2001, the act established a broad set of criteria to ensure that changes could be effectively promulgated with respect to the design, construction, and installation of the stock of manufactured homes. A key provision of the MHIA was the need to establish an installation standard that could be utilized by the U.S. Department of Housing and Urban Development (HUD), the ultimate overseer of manufactured homes. Thus, not only was NFPA 225 developed to pick up where that previous NCSBCS document had left off, it became an integral part of providing another option, along with other state-sponsored installation standards, that could potentially be considered by HUD.

The installation criteria in this standard are widely varied and cover a range of subjects. As written, NFPA 225 is intended to be applied to new installations, regardless of whether they are at new or existing manufactured housing sites. These criteria are intended to be adopted and enforced by the authority having jurisdiction when an alternative state or federal installation standard does not exist.

In addition to covering the basic administrative features and criteria, provisions are included for site preparation work, foundations, and procedures during on-site installation or erection, as well as management of appliances and utility connections. Requirements reflecting current design loads and practices associated with seismic, wind, and flood events have been included. These provisions govern single-section as well as multisection homes and provide requirements for everything from interconnection criteria for multisection homes to anchor provisions to restrict movement from wind loads, seismic events, and floods.

The 2009 edition added extensive revisions to the ground anchor design and spacing criteria. These revisions included the addition of more detail concerning soil conditions, width of the unit being installed, and anticipated loading on the home. An entirely new chapter, Chapter 15, outlined a design approach for prescriptive flood design provisions. These changes allowed the 2009 edition of NFPA 225 to align more closely with the requirements of FEMA's flood-resistant design criteria and the 2005 edition of ASCE/SEI 7, *Minimum Design Loads for Buildings and Other Structures*.

The 2013 edition included a new section on retroactivity in Chapter 1, and a new provision requiring carbon monoxide detectors was added to align with the requirements for other residential occupancies. Also, the lists of publications in Chapter 2 and Annex E were updated.

NFPA and National Fire Protection Association are registered trademarks of the National Fire Protection Association, Quincy, Massachusetts 02169.

AVA Documents Document Sharing Hub

Full document details: NFPA 225 2017

The 2017 edition includes the following changes:

(1) The 2013 standard provided guidance on smoke alarms and carbon monoxide detectors but was silent on how fire sprinkler systems should be dealt with during the installation process. For the 2017 edition, language has been added to ensure that the installer is provided with the necessary information from the manufacturer to accomplish the connection of the fire sprinkler system and system inspection so the system performs as the codes and standards intend.
(2) In Section 11.2, the committee has removed the word *approved* as being beyond the scope of this document.
(3) Because ASCE 24, *Flood Resistant Design and Construction*, was revised and republished in 2014, 12.4.2.2.1 clarifies which item refers to non-engineered flood openings, revises the referenced section number to match the 2014 edition of ASCE 24 and also clarifies which item refers to engineered flood openings.
(4) Referenced publications have been updated as appropriate.

Documents
Document Sharing Hub
Full document details: NFPA 225 2017

Technical Committee on Manufactured Housing

John Lake, *Chair*
City of Gainesville, FL [E]

Fred Benn, Advanced Automatic Sprinkler, Inc., CA [M]
Rep. National Fire Sprinkler Association

David G. Bueche, Hoover Treated Wood Products, CO [M]

Stanley C. Harbuck, School of Building Inspection, UT [C]
Rep. American Public Health Association

Thomas L. Harman, University of Houston-Clear Lake, TX [SE]

Christopher P. Jones, Christopher P. Jones & Associates, NC [E]
Rep. FEMA/Mitigation Division

John V. Loscheider, Loscheider Engineering Company, WA [U]
Rep. Building Seismic Safety Council/Code Resource Support Committee

Michael Lubliner, Washington State University, WA [U]
Rep. Northwest Energy Efficiency Alliance

Ty J. Maltbie, Viega LLC, KS [M]

Robert Parks, Healthy Homes of Louisiana, LA [SE]

Bruce J. Swiecicki, National Propane Gas Association, IL [IM]

Larry J. Tanner, Texas Tech University, TX [RT]

Randy E. Vogt, Minnesota Department of Labor & Industry, MN [E]

Alternates

David C. Delaquila, Aquila Consulting LLC, OH [IM]
(Alt. to Bruce J. Swiecicki)

Dean C. Hunter, Minnesota Department of Labor & Industry, MN [E]
(Voting Alt.)

Joshua Jones, Fire Protection Industries (The Moran Group), PA [M]
(Alt. to Fred Benn)

David K. Low, DK Low & Associates, LLC, VA [E]
(Alt. to Christopher P. Jones)

Jake Pauls, Jake Pauls Consulting Services, Canada [C]
(Alt. to Stanley C. Harbuck)

Nonvoting

Richard A. Mendlen, U.S. Department of Housing & Urban Development, DC [E]

Allan Fraser, NFPA Staff Liaison

This list represents the membership at the time the Committee was balloted on the final text of this edition. Since that time, changes in the membership may have occurred. A key to classifications is found at the back of the document.

NOTE: Membership on a committee shall not in and of itself constitute an endorsement of the Association or any document developed by the committee on which the member serves.

Committee Scope: This Committee shall have primary responsibility for documents on manufactured homes including the installation, sites and communities, and the maintenance of and improvements for existing manufactured homes.

AVA Documents 2017 Edition Document Sharing Hub

Full document details: NFPA 225 2017

Contents

Chapter 1 Administration **225–** 6
1.1 Scope. **225–** 6
1.2 Purpose. (Reserved) **225–** 6
1.3 Application. **225–** 6
1.4 Retroactivity. **225–** 6
1.5 Term Use. **225–** 6
1.6 Equivalency. **225–** 7

Chapter 2 Referenced Publications **225–** 7
2.1 General. **225–** 7
2.2 NFPA Publications. **225–** 7
2.3 Other Publications. **225–** 7
2.4 References for Extracts in Mandatory Sections. **225–** 8

Chapter 3 Definitions **225–** 8
3.1 General. **225–** 8
3.2 NFPA Official Definitions. **225–** 8
3.3 General Definitions. **225–** 8

Chapter 4 General **225–** 10
4.1 Preinstallation Considerations. **225–** 10
4.2 Alterations. **225–** 10
4.3 Data Plate. **225–** 10
4.4 Installation Considerations. **225–** 10
4.5 Design and Construction. **225–** 10

Chapter 5 Site Preparation **225–** 14
5.1 Access for Transporter. **225–** 14
5.2 Encroachments and Setback Distances. **225–** 14
5.3 Fire Separation Distance. **225–** 14
5.4 Issuance of Permits. **225–** 14
5.5 Site Preparation. **225–** 14
5.6 Investigation and Bearing Capacity of Soil. **225–** 14
5.7 Drainage. **225–** 14
5.8 Ground Moisture Control. **225–** 14

Chapter 6 Foundations **225–** 15
6.1 General. **225–** 15
6.2 Piers. **225–** 15
6.3 Footings. **225–** 19
6.4 Permanent Foundations. **225–** 20
6.5 Special Considerations. **225–** 20

Chapter 7 Installation Procedures **225–** 23
7.1 Before Moving Manufactured Home to Location. **225–** 23
7.2 Positioning of Home. **225–** 23
7.3 Interconnection of Multisection Homes. **225–** 23
7.4 Crossover Connections for Multisection Manufactured Homes. **225–** 23
7.5 Anchoring Instructions. **225–** 24
7.6 Installation of On-Site Structures. **225–** 30
7.7 Installation Close-Up/Finishing. **225–** 30

Chapter 8 Site-Installed Features **225–** 31
8.1 Installation of Site-Installed Features. **225–** 31
8.2 Hinged Roofs and Eaves. **225–** 31
8.3 Garden and Bay Windows. **225–** 31
8.4 Awnings and Ramadas. **225–** 31
8.5 Miscellaneous Lights and Fixtures. **225–** 31
8.6 Ventilation Options. **225–** 32
8.7 Optional Panels, Siding, and Molding. **225–** 32
8.8 Skirting. **225–** 32
8.9 Telephone and Cable TV. **225–** 34
8.10 Joints and Seams. **225–** 34

Chapter 9 Preparation of Appliances **225–** 34
9.1 Clothes Dryer Vent. **225–** 34
9.2 Comfort Cooling Systems. **225–** 34
9.3 Fireplace and Wood-Stove Chimneys and Air Inlets. **225–** 35
9.4 Range, Cooktop, and Oven Venting. **225–** 35
9.5 Flood Hazard Areas. **225–** 35
9.6 Seismic Design Categories D0, D1, D2, and E. .. **225–** 35

Chapter 10 Utility System Connection and Testing **225–** 36
10.1 Proper Procedures. **225–** 36
10.2 Water Supply. **225–** 36
10.3 Drainage System. **225–** 37
10.4 Gas Supply. **225–** 38
10.5 Heating Oil Systems. **225–** 38
10.6 Electricity. **225–** 39

Chapter 11 Life Safety Features **225–** 39
11.1 Smoke Alarms. **225–** 39
11.2 Fire Sprinkler Systems. **225–** 39
11.3 Carbon Monoxide Detectors. **225–** 39
11.4 Fire Separation Distances. **225–** 39

Chapter 12 Installation in Flood Hazard Areas **225–** 39
12.1 General. **225–** 39
12.2 Lowest Floor Elevation. **225–** 40
12.3 Foundations and Anchoring. **225–** 40
12.4 Installation Procedures. **225–** 40
12.5 Post-Installation Considerations. **225–** 41
12.6 Preparation of Appliances. **225–** 41
12.7 Utility Systems. **225–** 41

Chapter 13 Seismic Provisions for Prescriptive Design of Support Systems **225–** 41
13.1 Scope. **225–** 41
13.2 Minimum Prescriptive Support System Requirements. **225–** 42
13.3 Prescriptive Pier Support Systems. **225–** 42
13.4 Prescriptive Foundation Wall Support Systems. **225–** 42
13.5 Prescriptive Wood Cripple Wall Support Systems. **225–** 46

Chapter 14 Seismic Installation and Equipment Bracing Requirements **225–** 46
14.1 General. **225–** 46
14.2 Site-Installed Water Heaters. **225–** 46
14.3 Site-Installed Equipment. **225–** 46
14.4 Utility Attachments. **225–** 47

Chapter 15 Prescriptive Flood Provision Designs **225–** 47
15.1 Scope. **225–** 47
15.2 Anchorage and Support Materials. **225–** 47
15.3 General Limitations. **225–** 47
15.4 Prescriptive Ground Anchor Support and Anchorage System. **225–** 47
15.5 Prescriptive Foundation Wall Support and Anchorage Systems. **225–** 47

Documents
Document Sharing Hub
Full document details: NFPA 225 2017

Annex A **Explanatory Material** **225–** 55

Annex B **Final Inspection Checklist** **225–** 60

Annex C **Sample Checklist for AHJ Officials** **225–** 60

Annex D **Sample Schedule for Manufactured Home Installation Permits** **225–** 64

Annex E **Informational References** **225–** 64

Index **225–** 66

Documents
2017 Edition
Document Sharing Hub

Full document details: NFPA 225 2017

NFPA 225

Model Manufactured Home Installation Standard

2017 Edition

IMPORTANT NOTE: This NFPA document is made available for use subject to important notices and legal disclaimers. These notices and disclaimers appear in all publications containing this document and may be found under the heading "Important Notices and Disclaimers Concerning NFPA Standards." They can also be viewed at www.nfpa.org/disclaimers or obtained on request from NFPA.

UPDATES, ALERTS, AND FUTURE EDITIONS: New editions of NFPA codes, standards, recommended practices, and guides (i.e., NFPA Standards) are released on scheduled revision cycles. This edition may be superseded by a later one, or it may be amended outside of its scheduled revision cycle through the issuance of Tentative Interim Amendments (TIAs). An official NFPA Standard at any point in time consists of the current edition of the document, together with all TIAs and Errata in effect. To verify that this document is the current edition or to determine if it has been amended by TIAs or Errata, please consult the National Fire Codes® Subscription Service or the "List of NFPA Codes & Standards" at www.nfpa.org/docinfo. In addition to TIAs and Errata, the document information pages also include the option to sign up for alerts for individual documents and to be involved in the development of the next edition.

NOTICE: An asterisk (*) following the number or letter designating a paragraph indicates that explanatory material on the paragraph can be found in Annex A.

A reference in brackets [ ] following a section or paragraph indicates material that has been extracted from another NFPA document. As an aid to the user, the complete title and edition of the source documents for extracts in mandatory sections of the document are given in Chapter 2 and those for extracts in informational sections are given in Annex E. Extracted text may be edited for consistency and style and may include the revision of internal paragraph references and other references as appropriate. Requests for interpretations or revisions of extracted text shall be sent to the technical committee responsible for the source document.

Information on referenced publications can be found in Chapter 2 and Annex E.

Chapter 1 Administration

1.1* Scope. This model standard shall cover the installation of manufactured homes wherever sited in the United States and its territories. The manufacturer's installation instructions shall apply under either of the following conditions:

(1) To items not covered by this standard
(2) Where the manufacturer's approved installation instructions provide a specific method of performing a specific operation or assembly

1.2 Purpose. (Reserved)

1.3 Application. The provisions of this standard shall apply to manufactured homes used as dwelling units. This standard makes no provisions for other residential occupancies.

1.3.1 This standard shall not apply to manufactured homes used for other than dwelling purposes.

1.3.2 The provisions of this standard shall not apply to recreational vehicles as defined in NFPA 1192, or to park trailers as defined in ANSI/RVIA A119.5, *Recreational Park Trailers.*

1.3.3* The provisions of this standard shall apply to park trailers labeled as manufactured homes.

1.3.4 The manufactured homes covered by this standard shall comply with the U.S. Department of Housing and Urban Development (HUD) federal Manufactured Home Construction and Safety Standards (MHCSS) Program, as set forth in 24 CFR 3280, *Manufactured Home Construction and Safety Standards*; 24 CFR 3282, *Manufactured Home Procedural and Enforcement Regulations*; and 24 CFR 3285, *Model Manufactured Home Installation Standard.* Mobile homes built prior to June 15, 1976, are also covered by this standard.

1.3.5 This standard is designed to be adopted by authorities having jurisdiction over, and responsibility for, the safety and health of manufactured home users. It is intended to apply to all home installations, whether at new or existing manufactured home sites.

1.3.6 Flood Hazard Areas. The provisions of this standard shall apply to installations on home sites that are wholly or partly located in flood hazard areas, including installations of new manufactured homes, replacement manufactured homes, substantial improvement of existing manufactured homes, and repair of substantially damaged manufactured homes. Installations in flood hazard areas shall meet the requirements of Chapter 12.

1.3.6.1* Pre-Installation Considerations. Prior to the installation of a manufactured home, it shall be determined whether the home site lies wholly or partly within a special flood hazard area as shown on the authority having jurisdiction's (AHJ's) flood hazard map. If the AHJ has not adopted a flood hazard map, the AHJ shall be consulted to determine installation requirements.

1.4 Retroactivity. The provisions of this standard reflect a consensus of what is necessary to provide an acceptable degree of protection from the hazards addressed in this standard at the time the standard was issued.

1.4.1 Unless otherwise specified, the provisions of this standard shall not apply to facilities, equipment, structures, or installations that existed or were approved for construction or installation prior to the effective date of the standard. Where specified, the provisions of this standard shall be retroactive.

1.4.2 In those cases where the authority having jurisdiction determines that the existing situation presents an imminent danger, the authority having jurisdiction shall be permitted to apply retroactively any portions of this standard deemed appropriate.

1.4.3 The retroactive requirements of this standard shall be permitted to be modified if their application clearly would be impractical in the judgment of the authority having jurisdiction, and only where it is clearly evident that a reasonable degree of safety is provided.

1.5 Term Use. The term *manufactured home* where used in this document shall be permitted to be used interchangeably with *home.*

Documents
Document Sharing Hub
Full document details: NFPA 225 2017

1.6 Equivalency.

1.6.1 General. Nothing in this standard shall be intended to prevent use of systems, fire resistance, effectiveness, durability, and safety over those prescribed by this standard. Technical documentation shall be submitted to the authority having jurisdiction to demonstrate equivalency. The system, method, or device shall be approved for the intended purpose by the AHJ.

1.6.2 Approval of Alternatives. Alternative systems, methods, or devices approved as equivalent by the AHJ shall be recognized as being in compliance with this standard.

1.6.3 Permitted Alternatives. The provisions of this standard shall not be construed to prevent the use of construction systems, materials, or methods of design, or interpolations, calculations, evaluations, or similar evidence based on test data acceptable to the AHJ, as alternatives to the standards and provisions set forth in this standard. Such alternatives shall be permitted to be offered for approval, and their consideration shall be as provided in 1.6.2 through 1.6.5.

1.6.4 Standards. Construction systems, materials, or methods of design referred to in this standard shall be considered as standards of quality and strength. New or alternative construction systems, materials, or methods of design shall be at least equal to, and shall meet the intent of, these standards for the corresponding use intended.

1.6.5 Systems, Materials, and Methods. Any person desiring to use construction systems, materials, or methods of design not specifically mentioned in this standard shall file with the authority having jurisdiction a request for permission to use such systems, materials, or methods. Where alternative construction systems or materials are requested, the request shall be submitted with documentation, in writing, that supports claims of the sufficiency of such construction systems or materials. If a test installation is proposed, a description of the location and purpose of the test shall also be submitted.

1.6.6 Approval. The AHJ shall approve alternate construction systems, materials, or methods of design when it is substantiated that the requirements of this standard are at least equaled. If, in the opinion of the AHJ, the requirements of this standard are not equaled by the alternative requested, approval for permanent work shall be refused. Consideration shall be given to test or prototype installations.

1.6.7 Tests.

1.6.7.1 Whenever there is insufficient evidence of compliance with the requirements of this standard, evidence that any material or method of construction does not conform to the requirements of this standard or insufficient evidence to substantiate claims for alternative construction systems, materials, or methods of construction, the AHJ shall be permitted to require tests for proof of compliance to be made by an approved agency at the expense of the owner or owner's agent.

1.6.7.2 Test methods shall be as specified by this standard for the material in question. If there are not appropriate test methods specified in the standard, the AHJ is authorized to accept an applicable test procedure from another source.

1.6.7.3 Copies of the results of all tests shall be retained for not less than 2 years after the acceptance of the building or structure.

1.6.8 Appeal. Any person whose request for use of alternative systems and materials or methods of design has been refused by the authority having jurisdiction shall be permitted to appeal to the board of appeals.

Chapter 2 Referenced Publications

2.1 General. The documents or portions thereof listed in this chapter are referenced within this standard and shall be considered part of the requirements of this document.

2.2 NFPA Publications. National Fire Protection Association, 1 Batterymarch Park, Quincy, MA 02169-7471.

NFPA 13D, *Standard for the Installation of Sprinkler Systems in One- and Two-Family Dwellings and Manufactured Homes,* 2016 edition.

NFPA 70® , *National Electrical Code®,* 2017 edition.

NFPA 501, *Standard on Manufactured Housing,* 2017 edition.

NFPA 501A, *Standard for Fire Safety Criteria for Manufactured Home Installations, Sites, and Communities,* 2017 edition.

NFPA 720, *Standard for the Installation of Carbon Monoxide (CO) Detection and Warning Equipment,* 2015 edition.

NFPA 750, *Standard on Water Mist Fire Protection Systems,* 2015 edition.

NFPA 1192, *Standard on Recreational Vehicles,* 2015 edition.

NFPA 5000® , *Building Construction and Safety Code®,* 2015 edition.

2.3 Other Publications.

2.3.1 ANSI Publications. American National Standards Institute, Inc., 25 West 43rd Street, 4th Floor, New York, NY 10036.

ANSI/AF&PA *Wood Frame Construction Manual (WFCM),* 2001.

ANSI/RVIA A119.5, *Recreational Park Trailers*, 2015.

2.3.2 ASCE Publications. American Society of Civil Engineers, 1801 Alexander Bell Drive, Reston, VA 20191.

ASCE/SEI 7, *Minimum Design Loads for Buildings and Other Structures,* 2005.

ASCE/SEI 24, *Flood Resistant Design and Construction*, 2014.

2.3.3 ASTM Publications. ASTM International, 100 Barr Harbor Drive, West Conshohocken, PA 19428-2959.

ASTM C90, *Standard Specification for Loadbearing Concrete Masonry Units*, 2014.

ASTM D3953, *Standard Specification for Strapping, Flat Steel and Seals*, 2015.

ASTM D4318, *Standard Test Methods for Liquid Limit, Plastic Limit, and Plasticity Index of Soils* 2010e1, editorial change 1, 2014.

ASTM E84, *Standard Test Method for Surface Burning Characteristics of Building Materials*, 2015a.

2.3.4 UL Publications. Underwriters Laboratories Inc., 333 Pfingsten Road, Northbrook, IL 60062-2096.

UL 723, *Standard for Test for Surface Burning Characteristics of Building Materials,* 2008, revised 2013.

AVA Documents 2017 Edition Document Sharing Hub

Full document details: NFPA 225 2017

2.3.5 U.S. Government Publications. U.S. Government Publishing Office, 732 North Capitol Street, NW, Washington, DC 20401-0001.

Title 24, Code of Federal Regulations, Part 3280, "Manufactured Home Construction and Safety Standards."

Title 24, Code of Federal Regulations, Part 3282, "Manufactured Home Procedural and Enforcement Regulations."

Title 24, Code of Federal Regulations, Part 3285, "Model Manufactured Home Installation Standard."

2.3.6 USGS Publications. United States Geological Survey National Center, 12201 Sunrise Valley Drive, Reston, VA 20192.

Seismic Design Category Map, 2000.

2.3.7 Other Publications. *Merriam-Webster's Collegiate Dictionary*, 11th edition, Merriam-Webster, Inc., Springfield, MA, 2003.

2.4 References for Extracts in Mandatory Sections.

NFPA 501A, *Standard for Fire Safety Criteria for Manufactured Home Installations, Sites, and Communities,* 2017 edition.

NFPA 5000®, Building Construction and Safety Code®, 2015 edition.

Chapter 3 Definitions

3.1 General. The definitions contained in this chapter shall apply to the terms used in this standard. Where terms are not defined in this chapter or within another chapter, they shall be defined using their ordinarily accepted meanings within the context in which they are used. *Merriam-Webster's Collegiate Dictionary*, 11th edition, shall be the source for the ordinarily accepted meaning.

3.2 NFPA Official Definitions.

3.2.1* Approved. Acceptable to the authority having jurisdiction.

3.2.2* Authority Having Jurisdiction (AHJ). An organization, office, or individual responsible for enforcing the requirements of a code or standard, or for approving equipment, materials, an installation, or a procedure.

3.2.3 Labeled. Equipment or materials to which has been attached a label, symbol, or other identifying mark of an organization that is acceptable to the authority having jurisdiction and concerned with product evaluation, that maintains periodic inspection of production of labeled equipment or materials, and by whose labeling the manufacturer indicates compliance with appropriate standards or performance in a specified manner.

3.2.4* Listed. Equipment, materials, or services included in a list published by an organization that is acceptable to the authority having jurisdiction and concerned with evaluation of products or services, that maintains periodic inspection of production of listed equipment or materials or periodic evaluation of services, and whose listing states that either the equipment, material, or service meets appropriate designated standards or has been tested and found suitable for a specified purpose.

3.2.5 Shall. Indicates a mandatory requirement.

3.2.6 Should. Indicates a recommendation or that which is advised but not required.

3.2.7 Standard. An NFPA Standard, the main text of which contains only mandatory provisions using the word "shall" to indicate requirements and that is in a form generally suitable for mandatory reference by another standard or code or for adoption into law. Nonmandatory provisions are not to be considered a part of the requirements of a standard and shall be located in an appendix, annex, footnote, informational note, or other means as permitted in the NFPA Manuals of Style. When used in a generic sense, such as in the phrase "standards development process" or "standards development activities," the term "standards" includes all NFPA Standards, including Codes, Standards, Recommended Practices, and Guides.

3.3 General Definitions.

3.3.1 Alteration. See 3.3.16, Installation Alteration.

3.3.2 Anchor. A device placed at the manufactured home site designed to transfer home anchoring loads to the ground.

3.3.3 Anchoring Equipment. Ties, straps, cables, turnbuckles, chains, and other approved components, including tensioning devices, that are used to secure a manufactured home to anchors.

3.3.4 Anchoring System. A combination of anchoring equipment and anchors that will, when properly designed and installed, resist the uplift, overturning, and lateral forces on the manufactured home.

3.3.5 Arid. An area subject to 15 in. (381 mm) or less of annual rainfall.

3.3.6* Crossovers. Utility connections in multisection homes that are located where the sections are joined.

3.3.7 Elevation.

3.3.7.1 ***Base Flood Elevation (BFE).*** The elevation of the base flood, including wave height, relative to the datum specified on a jurisdiction's flood hazard map. [**5000,** 2015]

3.3.7.2 ***Design Flood Elevation (DFE).*** The elevation of the design flood, including wave height, relative to the datum specified on a jurisdiction's flood hazard map. [**5000,** 2015]

3.3.8 Flood.

3.3.8.1 ***Base Flood.*** The flood having a 1 percent chance of being equaled or exceeded in any given year. [**5000,** 2015]

3.3.8.2 ***Design Flood.*** The greater of either (1) the base flood or (2) the flood so designated by the jurisdiction as its regulatory flood, with a 1 percent chance, or less, of being equaled or exceeded in any given year. [**5000,** 2015]

3.3.9 Flood Damage–Resistant Material. Any construction material capable of direct and prolonged contact with floodwaters without sustaining any damage that requires more than cosmetic repairs. [**5000,** 2015]

3.3.10* Flood Hazard Area. The greater of either (1) the special flood hazard area shown on the flood insurance rate map or (2) the area subject to flooding during the design flood and shown on a jurisdiction's flood hazard map, or otherwise legally designated. [**5000,** 2015]

Documents
Document Sharing Hub
Full document details: NFPA 225 2017

3.3.11 Flood Hazard Map. A map delineating the flood hazard area and adopted by a jurisdiction. [**5000,** 2015]

3.3.12 Footing. That portion of the support system that transmits loads directly to the soil.

3.3.13* Foundation Wall. A wall below the floor nearest grade that serves as a structural support for the home.

3.3.14 Imminent Danger. A condition or practice in an occupancy, structure, site, or community that poses a danger that could reasonably be expected to cause death, serious physical harm, or serious property loss.

3.3.15 Installation. Assembly, at the site of occupancy, of all portions of the manufactured home, connection of the home to existing utility connections, and installation of support and anchoring systems.

3.3.16 Installation Alteration. The replacement, addition, modification, or removal of any components of the required ground support or anchoring systems.

3.3.17 Installation Instructions. Instructions provided by the manufacturer that accompany each manufactured home and detail the manufacturer's requirements for ground support, anchoring systems, and other work completed on site.

3.3.18* Lowest Floor. The floor of the lowest enclosed area of a manufactured home. For the purpose of this standard, *lowest floor* shall mean the bottom of the longitudinal chassis frame beam in A zones, and the bottom of the lowest horizontal structural member supporting the home in V zones. An unfinished or flood-resistant enclosure, used solely for vehicle parking, home access or limited storage, shall not be considered the lowest floor, provided the enclosed area is not constructed so as to render the home in violation of the flood-related provisions of this standard.

3.3.19 Manufactured Home. A structure, transportable in one or more sections, which, in the traveling mode, is 8 body-ft (2.4 m) or more in width or 40 body-ft (12.2 m) or more in length or, when erected on site, is 320 ft^2 (29.7 m^2) or more and that is built on a permanent chassis and designed to be used as a dwelling, with or without a permanent foundation, when connected therein except that such terms shall include any structure that meets all the requirements of this paragraph except the size requirements and with respect to which the manufacturer voluntarily files a certification required by the regulatory agency. Calculations used to determine the number of square feet in a structure are based on the structure's exterior dimensions, measured at the largest horizontal projections when erected on site. These dimensions include all expandable rooms, cabinets, and other projections containing interior space, but do not include bay windows.

3.3.19.1 ***New Manufactured Home.*** A manufactured home that has not been sold to a person/consumer for purposes other than retail sale.

3.3.20* Manufactured Home Accessory Building or Structure. A building or structure that is an addition to or supplements the facilities provided by a manufactured home.

3.3.21 Manufactured Home Gas Supply Connector. A listed connector designed for connecting the manufactured home to the gas supply source. [**501A,** 2017]

3.3.22 Manufactured Home Park or Subdivision. For all matters related to installation in flood hazard areas, the term *manufactured home park or subdivision* shall mean a parcel (or contiguous parcels) of land divided into two or more manufactured home sites for sale or rent.

3.3.22.1 ***Existing Manufactured Home Park or Subdivision.*** For all matters related to installation in flood hazard areas, the term *existing manufactured home park or subdivision* shall mean a home park or subdivision for which the construction of facilities for servicing the sites (including, at a minimum, the installation of utilities, the construction of streets, and either final site grading or installation of pads) was completed prior to the effective date of the initial adoption of floodplain management regulations or map by the AHJ.

3.3.22.2 ***New Manufactured Home Park or Subdivision.*** For all matters related to installation in flood hazard areas, the term *new manufactured home park or subdivision* shall mean a home park or subdivision for which the construction of facilities for servicing the sites (including, at a minimum, the installation of utilities, the construction of streets, and either final site grading or installation of pads) is completed on or after the effective date of the initial adoption of floodplain management regulations or map by the AHJ.

3.3.23 Manufactured Home Site. A parcel of land for the accommodation of one manufactured home, its accessory buildings or structures, and accessory equipment for the exclusive use of the occupants. [**501A,** 2017]

3.3.24* Pier. An isolated support used in a support system extending between the footing and the manufactured home.

3.3.25 Ramada. Any freestanding roof or shade structure installed or erected above a manufactured home or any portion thereof. [**501A,** 2017]

3.3.26 Skirting. A weather-resistant material used to enclose the perimeter of the conditioned living area of the home from the bottom of the manufactured home to grade.

3.3.27 Stabilizing Devices. All components of the anchoring and support systems, such as piers, footings, ties, anchoring equipment, anchors, or any other materials and methods of construction, that support and secure the manufactured home to the ground.

3.3.28 Structure. That which is built or constructed, an edifice or building of any kind, or any piece of work artificially built up or composed of parts joined together in some definite manner.

3.3.29 Substantial Damage. For manufactured homes, including support and anchoring systems, located wholly or partly within the flood hazard areas, damage of any origin whereby the cost of restoring the manufactured home, including support and anchoring systems, to its predamage condition would equal or exceed 50 percent of the market value of the manufactured homes, including support and anchoring systems.

3.3.30 Substantial Improvement. For manufactured homes, including support and anchoring systems located wholly or partly within the flood hazard area: (1) any repair, addition, reconstruction, rehabilitation or improvement of the manufactured home, including support and anchoring systems, the cost of which equals or exceeds 50 percent of the market value of the manufactured homes, including support and anchoring

AVA Documents 2017 Edition Document Sharing Hub

Full document details: NFPA 225 2017

systems; (2) if a manufactured home, including support and anchoring systems, has sustained substantial damage, any repairs or reconstruction regardless of the actual work performed. Substantial improvement shall not include any project or improvement of a manufactured home required to correct existing health, sanitary, or safety code violations identified by the AHJ, and that are the minimum necessary to assure safe living conditions.

3.3.31 Support System. Piers, foundation walls, and other equivalent systems approved in accordance with 4.5.1.3 and their footings, anchorage to the manufactured home, shims, and any combination thereof that, when properly installed, support the manufactured home.

3.3.32 Tie. See 3.3.3, Anchoring Equipment.

3.3.32.1 ***Diagonal Tie.*** A tie intended to resist horizontal or shear forces and to resist vertical, uplift, and overturning forces.

3.3.32.2 ***Vertical Tie.*** A tie intended to resist uplifting and overturning forces.

3.3.33 Utility Connection. The connection of the manufactured home to existing utilities that include, but are not limited to, electricity, water, sewer, gas, or fuel oil.

Chapter 4 General

4.1 Preinstallation Considerations.

4.1.1 Prior to location or relocation of a manufactured home, the authority having jurisdiction shall be contacted for installation and permitting requirements.

4.1.2 Flood Hazard Areas. See Chapter 12.

4.2* Alterations. Prior to alteration of a home installation, the authority having jurisdiction shall be contacted to determine if plan approval and permit are required.

4.3* Data Plate. The home installation shall be capable of resisting the loads and conditions listed on the data plate.

4.4 Installation Considerations. The items listed in 4.4.1 through 4.4.4 shall be reviewed prior to installing the manufactured home.

4.4.1 Installation Instructions. Specific installation methods, operations, and assemblies in the manufacturer's installation instructions (if available) shall be followed.

4.4.2 Utility Schematics. Field installations shall be in accordance with the utility schematics provided by the manufacturer, or as required by the AHJ.

4.4.3 Home Installation Manual Supplements. Supplemental pages shall be permitted to be included with the home, outlining special features in the home that are not covered or that differ from this document.

4.4.4 The home shall be installed in accordance with the design zone maps indicated on the data plate.

4.5 Design and Construction. Installation of manufactured homes, including support and anchoring systems, shall be designed and constructed to support all loads and load combinations required by this chapter and elsewhere in this standard.

4.5.1 Design Methods. Design of support systems and their connection to the manufactured home shall be in accordance with 4.5.1.1, 4.5.1.2, or 4.5.1.3.

4.5.1.1 Prescriptive Design. Design shall be in accordance with the provisions of this standard.

4.5.1.2 Engineered Design. Design shall be in accordance with ASCE/SEI 7, *Minimum Design Loads for Buildings and Other Structures.*

4.5.1.3 Equivalency. Equivalent systems shall be permitted if approved by the authority having jurisdiction.

4.5.2 Combined Design Methods. Support systems shall not be designed using a combination of prescriptive design in accordance with 6.2.3 through 6.2.5 and engineered design in accordance with 4.5.1.2 or equivalency in accordance with 4.5.1.3, within the support system for a single home or accessory building.

4.5.3 Seismic Design.

4.5.3.1 Seismic Design Criteria.

4.5.3.1.1 Determination of Seismic Design Category. Seismic design categories (SDC) shall be determined from either Table 4.5.3.1.1 or Figure 4.5.3.1.1.

4.5.3.1.2 SDC A, B, and C. The provisions of 4.5.3.2 through 4.5.3.4 shall not apply to SDC A, SDC B, or SDC C.

4.5.3.1.3 SDC D_0, D_1, D_2, and E. Manufactured homes located in SDC D_0, D_1, D_2, and E shall meet the additional requirements of either 4.5.3.2 or 4.5.3.3, and 4.5.3.4.

4.5.3.2 Prescriptive Design.

4.5.3.2.1 Prescriptive design in accordance with the seismic requirements of Chapter 13 shall be permitted for homes located in seismic design categories D_0, D_1, D_2, or E, provided the following:

(1) The 3-second gust basic wind speed is 90 mph (40.2 m/sec) or less, and
(2) The home is located outside of a flood hazard area, or
(3) If within a flood hazard area, is located outside a V zone or floodway

4.5.3.2.2 All other homes located in seismic design categories D_0, D_1, D_2, or E shall have an engineered design or approved equivalent system.

4.5.3.3 Engineered Design. Engineered design of support systems and their foundations and anchorage, in accordance with 4.5.1.2, shall include all applicable design loads and other applicable seismic provisions of ASCE/SEI 7, *Minimum Design Loads for Buildings and Other Structures.*

4.5.3.4 Seismic Installation and Equipment Bracing Requirements. Manufactured homes shall conform to the additional installation and equipment bracing requirements of Chapter 14.

Documents
Document Sharing Hub
Full document details: NFPA 225 2017

Table 4.5.3.1.1 Seismic Design Category by County

Seismic Design Category	State	Counties
SDC D_0	Alaska	Bristol Bay, Juneau, Northwest Arctic
	Arizona	Coconino, La Paz, Mohave, Pima
	Arkansas	Arkansas, Cleburne, Faulkner, Fulton, Izard, Lonoke, Monroe, Montgomery, Phillips, Prairie, Pulaski, Sharp, Stone, Van Buren, White
	California	Butte, Calaveras, Madera, Sutter, Yuba
	Georgia	Catoosa, Murray, Whitfield
	Hawaii	Honolulu
	Idaho	Adams, Bannock, Bingham, Blaine, Camas, Cassia, Elmore, Franklin, Gem, Jefferson, Madison, Power, Valley, Washington
	Illinois	Bond, Clay, Clinton, Crawford, Edwards, Effingham, Fayette, Jasper, Jefferson, Lawrence, Madison, Marion, Monroe, Randolph, Richland, St. Clair, Wabash, Washington, Wayne
	Indiana	Gibson, Knox, Pike, Posey, Spencer, Vanderburgh, Warrick
	Kentucky	Christian, Daviess, Henderson, Hopkins, McLean, Muhlenberg, Webster
	Maine	Aroostook
	Mississippi	Benton, Coahoma, Lafayette, Marshall, Panola, Quitman, Tate
	Missouri	Carter, Iron, Jefferson, Madison, Oregon, Reynolds, St. Francois, St. Louis, Ste. Genevieve, Shannon, Washington
	Montana	Glacier, Granite, Lewis and Clark, Lincoln, Meagher, Powell, Silver Bow
	Nevada	Clark, Pershing, White Pine
	New Mexico	Bernalillo, Los Alamos, Rio Arriba, Sandoval, Santa Fe, Socorro, Valencia
	New York	Clinton, Essex, Franklin, St. Lawrence
	North Carolina	Cherokee, Columbus, Graham, Swain
	Oregon	Baker, Harney, Hood River, Jackson, Linn, Malheur, Umatilla
	South Carolina	Aiken, Allendale, Barnwell, Beaufort, Chesterfield, Darlington, Dillon, Fairfield, Hampton, Jasper, Kershaw, Lee, Lexington, Marlboro, Richland
	Tennessee	Benton, Blount, Bradley, Chester, Cocke, Decatur, Grainger, Hamblen, Hamilton, Hardeman, Hardin, Henderson, Houston, Humphreys, Jefferson, Knox, Loudon, McMinn, McNairy, Monroe, Montgomery, Polk, Sevier, Stewart, Union
	Texas	El Paso, Hudspeth
	Utah	Beaver, Carbon, Emery, Garfield, Kane, Millard, Piute, Sanpete, Sevier, Washington, Wayne
	Vermont	Franklin, Grand Isle
	Washington	Benton, Chelan, Kittias, Klickitat, Skamania, Walla Walla, Yakima
SDC D_1	Alaska	Fairbanks North Star, Sitka
	Arizona	Yuma
	Arkansas	Independence, Lee, Randolph, Woodruff
	California	Amador, Glenn, Mariposa, Tulare, Tuolumne
	Hawaii	Maui
	Idaho	Boise, Bonneville, Butte, Caribou, Clark, Lemhi, Oneida, Teton
	Illinois	Franklin, Gallatin, Hamilton, Hardin, Perry, Saline, White
	Kentucky	Caldwell, Calloway, Crittenden, Lyon, Trigg, Union
	Mississippi	DeSoto, Tunica
	Missouri	Perry, Ripley, Wayne
	Montana	Broadwater, Flathead, Jefferson, Missoula, Park, Sanders
	Nevada	Churchill, Elko, Eureka, Humboldt, Lander, Lincoln, Nye
	Oregon	Clackamas, Columbia, Lake, Marion, Multnomah, Washington
	South Carolina	Bamberg, Calhoun, Horry, Marion, Sumter
	Tennessee	Bedford, Carroll, Fayette, Henry, Madison
	Utah	Iron, Juab, Morgan, Rich, Tooele, Wasatch
	Washington	Clark, Cowlitz, Lewis, San Juan, Skagit, Thurston, Whatcom
	Wyoming	Park, Sublette
SDC D_2	Alaska	Aleutians East, Anchorage, Denali, Haines, Lake and Peninsula, Matanuska-Susitna
	Arkansas	Jackson, Lawrence
	California	Colusa, Del Norte, El Dorado, Fresno, Kings, Merced, Modoc, Nevada, Placer, Plumas, Sacramento, San Joaquin, Sierra, Siskiyou, Stanislaus, Tehama, Yolo
	Idaho	Bear Lake, Custer, Fremont
	Illinois	Jackson, Pope, Williamson
	Kentucky	Livingston, Marshall
	Missouri	Bollinger, Butler
	Montana	Beaverhead, Gallatin, Lake, Madison
	Nevada	Lyon, Mineral, Storey, Washoe
	Oregon	Benton, Clatsop, Coos, Curry, Douglas, Josephine, Klamath, Lane, Lincoln, Polk, Tillamook, Yamhill
	South Carolina	Berkeley, Charleston, Clarendon, Colleton, Dorchester, Florence, Georgetown, Orangeburg, Williamsburg
	Tennessee	Weakley
	Utah	Box Elder, Cache, Summit, Utah
	Washington	Clallam, Grays Harbor, Island, Jefferson, King, Kitsap, Mason, Pacific, Pierce, Snohomish, Wahkaikum
	Wyoming	Lincoln, Teton
SDC E	Alaska	Kenai Peninsula, Kodiak Island, Yakutat
	Arkansas	Clay, Craighead, Crittenden, Cross, Greene, Mississippi, Poinsett, St. Francis
	California	Alameda, Alpine, Contra Costa, Humboldt, Imperial, Inyo, Kern, Lake, Lassen, Los Angeles, Marin, Mendocino, Mono, Monterey, Napa, Orange, Riverside, San Benito, San Bernadino, San Diego, San Francisco, San Luis Obispo, San Mateo, Santa Barbara, Santa Clara, Santa Cruz, Shasta, Solano, Sonoma, Trinity, Ventura
	Hawaii	Hawaii
	Illinois	Alexander, Johnson, Massac, Pulaski, Union
	Kentucky	Ballard, Carlisle, Fulton, Graves, Hickman, McCracken
	Missouri	Cape Girardeau, Dunklin, Mississippi, New Madrid, Pemiscot, Scott, Stoddard
	Nevada	Douglas, Esmeralda
	Tennessee	Crockett, Dyer, Gibson, Haywood, Lake, Lauderdale, Obion, Shelby, Tipton
	Utah	Davis, Salt Lake, Weber

Documents 2017 Edition Document Sharing Hub

Full document details: NFPA 225 2017

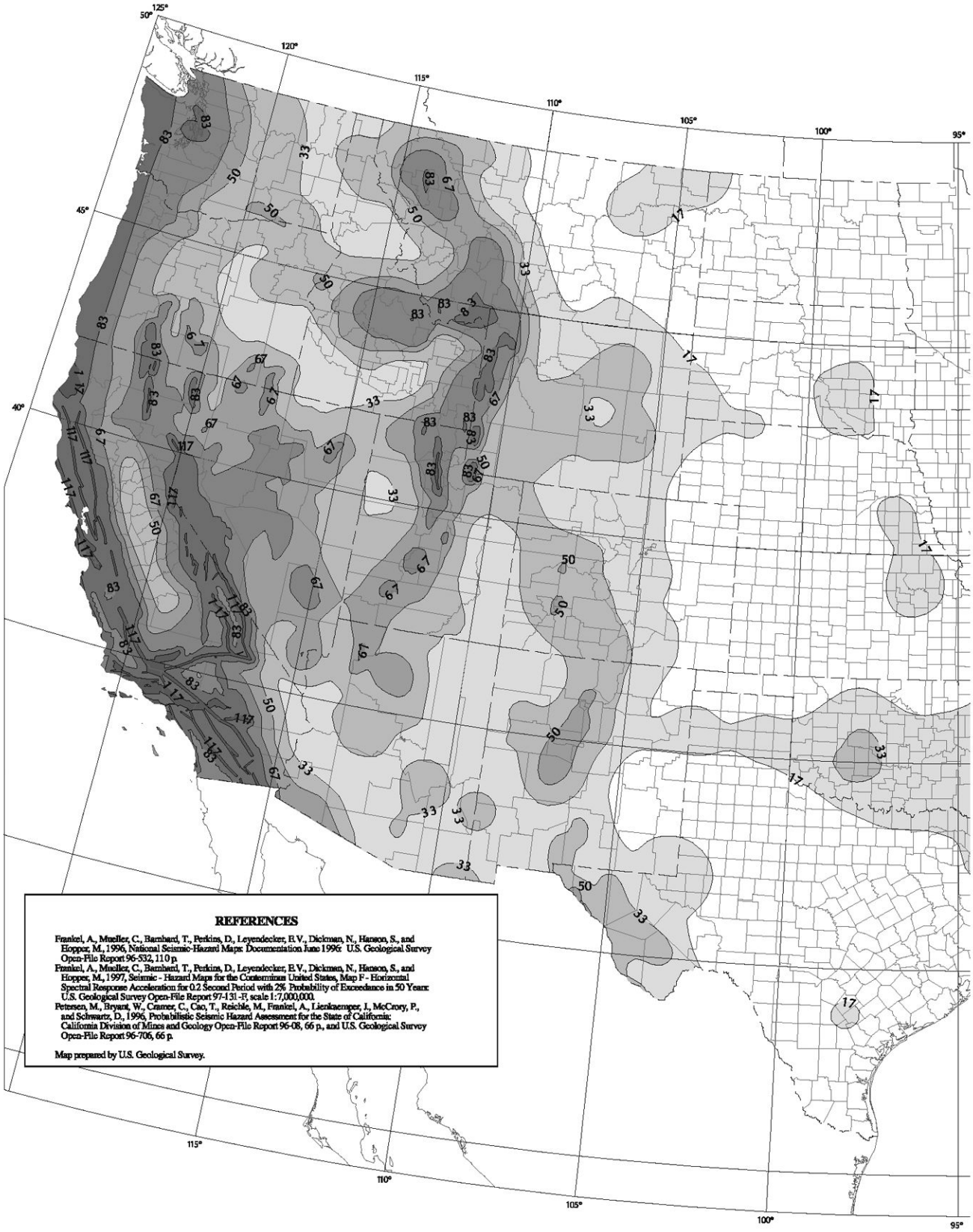

FIGURE 4.5.3.1.1 Seismic Design Category Map. *(Source: U.S. Geological Survey)*

Documents
Document Sharing Hub
Full document details: NFPA 225 2017

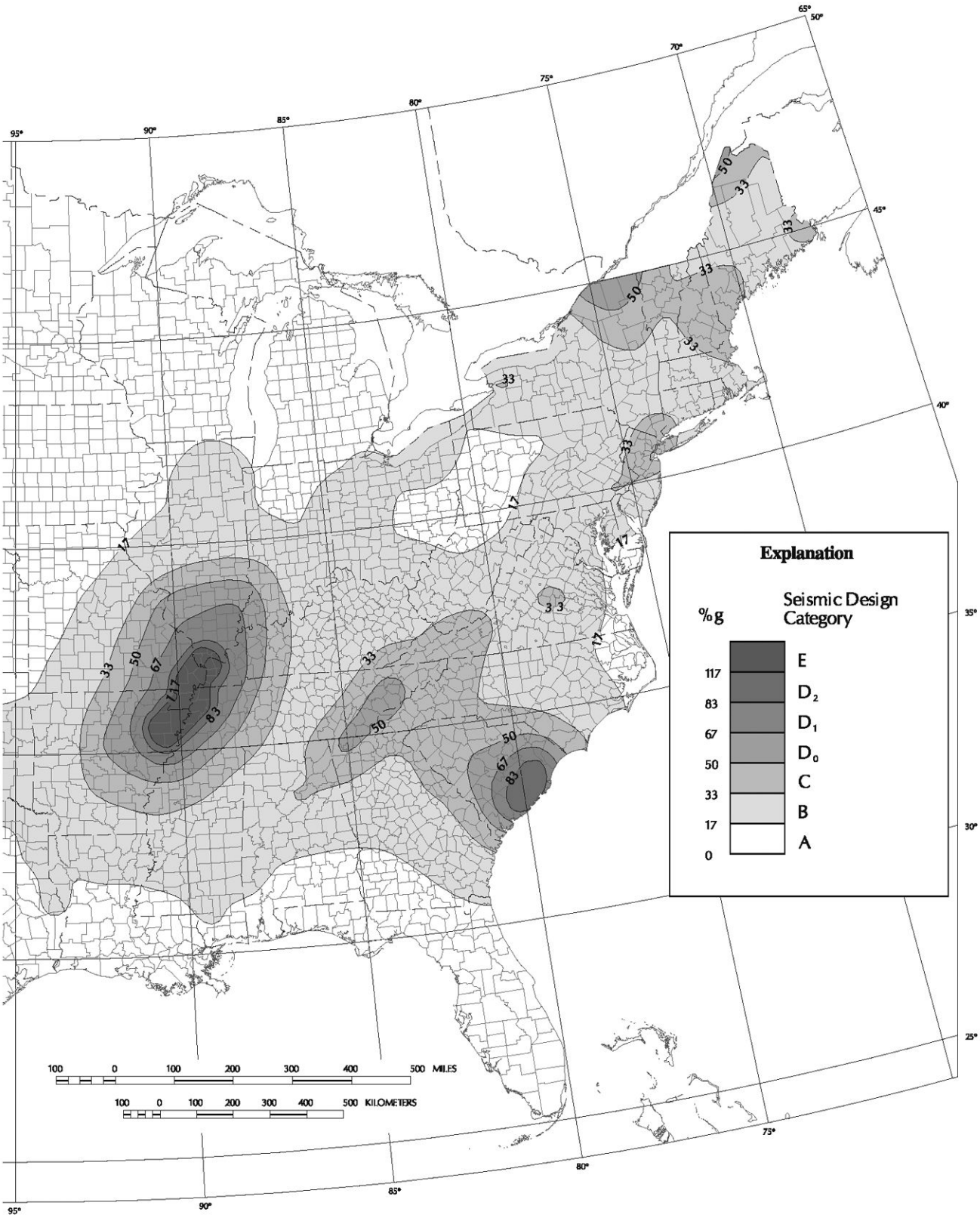

FIGURE 4.5.3.1.1 *Continued*

Documents 2017 Edition Document Sharing Hub
Full document details: NFPA 225 2017

Chapter 5 Site Preparation

5.1 Access for Transporter. Before attempting to move a home, it shall be ensured that the transportation equipment and home can be routed to the installation site and that all transportation permits required by the state, county, or municipality have been obtained.

5.2 Encroachments and Setback Distances. Local laws regarding encroachments in streets, yards, and courts shall be obeyed, and permissible setback distances from property lines and public roads shall be met.

5.3 Fire Separation Distance. Fire separation distances shall be in accordance with Chapter 6 of NFPA 501A or the requirements of the authority having jurisdiction, whichever is more stringent.

5.4 Issuance of Permits. All necessary local permits shall be obtained, and all fees shall be paid.

5.5 Site Preparation.

5.5.1 Prior to construction, the area to be occupied by the structure shall be cleared of debris, vegetation, and topsoil to a depth sufficient to remove all organic material.

5.5.2 Soil that supports footings and foundations shall be capable of accommodating all loads required by this standard. Fill soil that supports footings and foundations shall be designed, installed, and tested in accordance with accepted engineering practice. The design bearing capacity of soil shall be determined in accordance with Section 5.6.

5.6 Investigation and Bearing Capacity of Soil.

5.6.1* Presumptive Capacities. Where no unusual soil or saturation conditions are present, the allowable soil bearing pressures in Table 5.6.1 shall be permitted to be used. Higher values shall not be used unless they are substantiated by recognized tests, analysis, or other data, and then approved by the AHJ.

5.6.2 Soil Investigation. Where the soil-bearing capacity is unknown or questionable, the AHJ shall be permitted to require evaluation of subsoil conditions by a registered professional engineer or by a load test in accordance with *NFPA 5000* , 36.3.2. When approved by the AHJ, the soil-bearing capacity shall be permitted to be determined from local soil records.

5.6.3 Expansive Soils. [5000:36.3.3]

5.6.3.1 Where the nature of the soil is not known in sufficient detail, the authority having jurisdiction shall be permitted to require testing to determine the expansive characteristics of the soil. [**5000:**36.3.3.1]

5.6.3.2 Each potentially expansive stratum of soil above the level where a constant moisture content exists shall be tested in accordance with ASTM D4318, *Standard Test Methods for Liquid Limit, Plastic Limit, and Plasticity Index of Soils*, to determine its plasticity index (PI). [**5000:**36.3.3.2]

5.6.3.2.1 If the PI of all stratums is less than 15, the soil shall not be considered expansive. [**5000:**36.3.3.2.1]

5.6.3.2.2 If the PI of any stratum is 15 or greater, the soil shall be considered potentially expansive and shall be subjected to additional approved tests and evaluation to determine if the soil will adversely affect the structural integrity and serviceability of the structure. [**5000:**36.3.3.2.2]

Table 5.6.1 Maximum Allowable Soil Pressures

	Minimum Depth of Footing Below Adjacent Ground		Pressure Permitted If Footing Is at Minimum Depth*	
Class of Material	**ft**	**m**	**psf**	**kN/m²**
Compact fine sand	1	0.3	1000†	48†
Loose sand	2	0.6	500†	24†
Medium stiff clay	1	0.3	2000	96
Soft, sandy clay or clay	2	0.6	1000	48
Compact inorganic sand and silt mixtures	1	0.3	1000	48
Loose inorganic sand and silt mixtures	2	0.6	500	24
Loose organic sand and silt mixtures and peat	—	—	0	0

*These pressures are considered sufficient to prevent failure of the supporting ground but not to prevent excessive foundation movement or settlement where unusual soil or moisture conditions are encountered.

†Values are for footings 1 ft (0.30 m) wide and are permitted to be increased in direct proportion to the width of the footing to a maximum of 2½ times the designated value.

5.7 Drainage.

5.7.1 Purpose. Drainage shall be provided that prevents water build-up under the home, shifting or settling of the foundation, dampness in the home, damage to siding and bottom board, buckling of walls and floors, and problems with the operation of doors and windows.

5.7.1.1 The home site shall be graded to permit water to drain from under the home. *(See Figure 5.7.1.1)*

5.7.1.2 All drainage shall be diverted away from the home.

5.7.2* Sloped Site Considerations. Sloped sites shall be protected from surface runoff from the surrounding area.

5.7.3 Drainage Structures. Ditches and culverts shall be permitted to be used to drain surface runoff and to be included in the overall site preparation.

5.7.4 Gutters and Downspouts. When gutters and downspouts are installed, the runoff shall be directed away from the home.

5.8 Ground Moisture Control.

5.8.1 Vapor Retarder. If the space under the home is to be enclosed with skirting or other material, a vapor retarder that keeps ground moisture out of the home shall be installed except in arid regions with dry soil conditions, or when approved by the AHJ.

5.8.2 Acceptable Types of Ground Cover. A minimum of 6-mil polyethylene sheeting or its equivalent shall be used.

Documents
Document Sharing Hub
Full document details: NFPA 225 2017

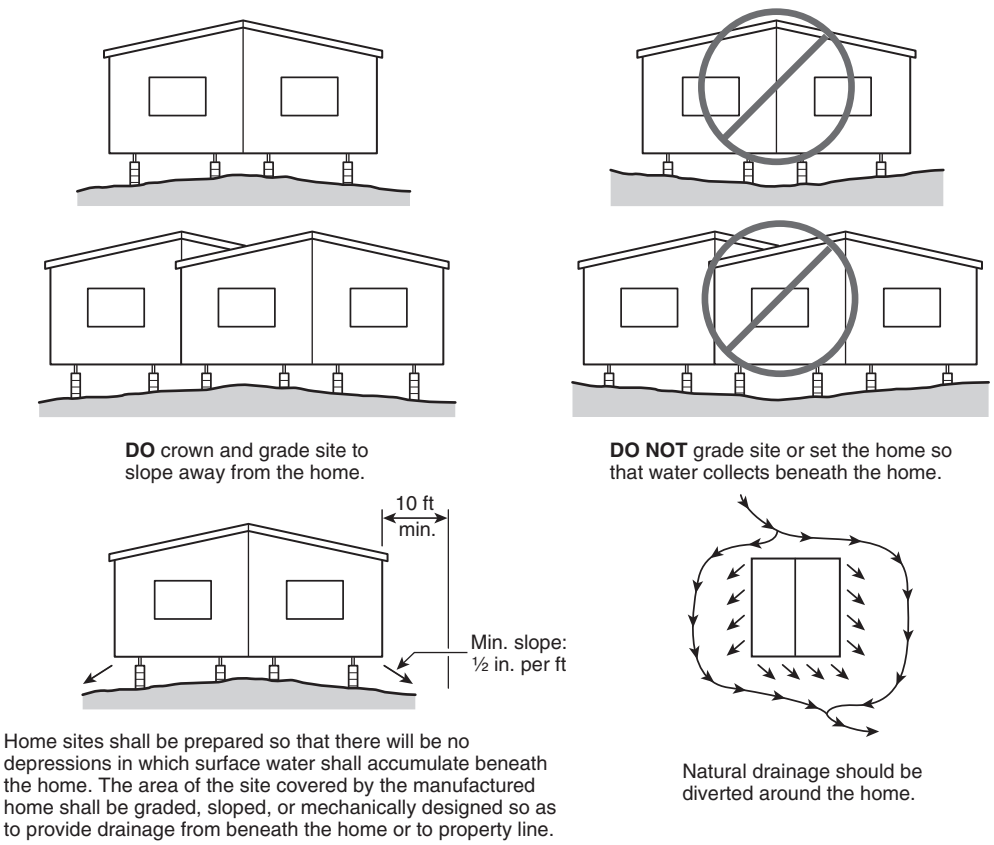

Note: For SI units, 1 ft = 0.3048 m, 1 in. = 25.4 mm.

FIGURE 5.7.1.1 Grading and Drainage.

5.8.3 Proper Installation.

5.8.3.1 When the entire area under the home is required to be covered with the sheeting as noted in 5.8.1, it shall be overlapped at least 12 in. (305 mm) at all joints.

5.8.3.2 Where soil and frost conditions permit placement of footings at grade level, the sheeting shall be placed directly beneath the footings.

Chapter 6 Foundations

6.1 General.

6.1.1 Foundations for manufactured home installations shall be constructed in accordance with Chapter 6. Alternately, support systems shall be permitted to conform to engineered design methods in accordance with 4.5.1.2 or equivalency provisions in accordance with 4.5.1.3.

6.1.2 Details, plans, and/or test data shall be submitted to the AHJ for approval.

6.1.3 Flood Hazard Areas. See Chapter 12.

6.1.4 Seismic Design Categories D_0, D_1, D_2, and E. Support systems for manufactured homes in seismic design categories D_0, D_1, D_2, and E shall meet the additional requirements of 4.5.3.

6.2 Piers.

6.2.1* General. The piers used shall be capable of transmitting the vertical live and dead loads to the foundation below.

6.2.2 Acceptable Piers — Materials Specification.

6.2.2.1* Piers shall be permitted to be concrete blocks, pressure-treated wood having 0.60 pcf (94 N/m^3) retention, or adjustable metal or concrete piers as shown in Figure 6.2.2.1(a) and Figure 6.2.2.1(b).

6.2.2.2 Manufactured piers shall be listed or labeled for the required load capacity.

6.2.3 Design Requirements.

6.2.3.1 Load-Bearing Capacity.

6.2.3.1.1 The load that each pier must carry shall depend on such factors as the dimensions of the home, the roof live load, the spacing of the piers, and the way the piers are used to support the home.

6.2.3.1.2 Center beam/marriage wall blocking shall be required for multisection homes in accordance with Table 6.2.3.1.2(a) or Table 6.2.3.1.2(b).

AVA Documents 2017 Edition Document Sharing Hub

Full document details: NFPA 225 2017

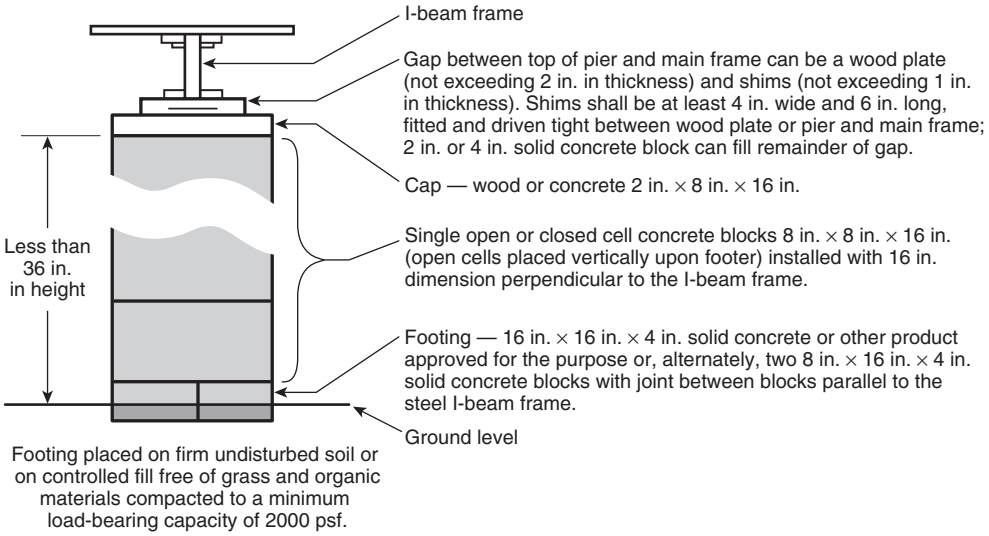

Note: For SI units, 1 in. = 25.4 mm, 1 psf = 0.04788 kN/m^2.

FIGURE 6.2.2.1(a) Typical Footing and Pier Installation — Less than 36 in. in Height.

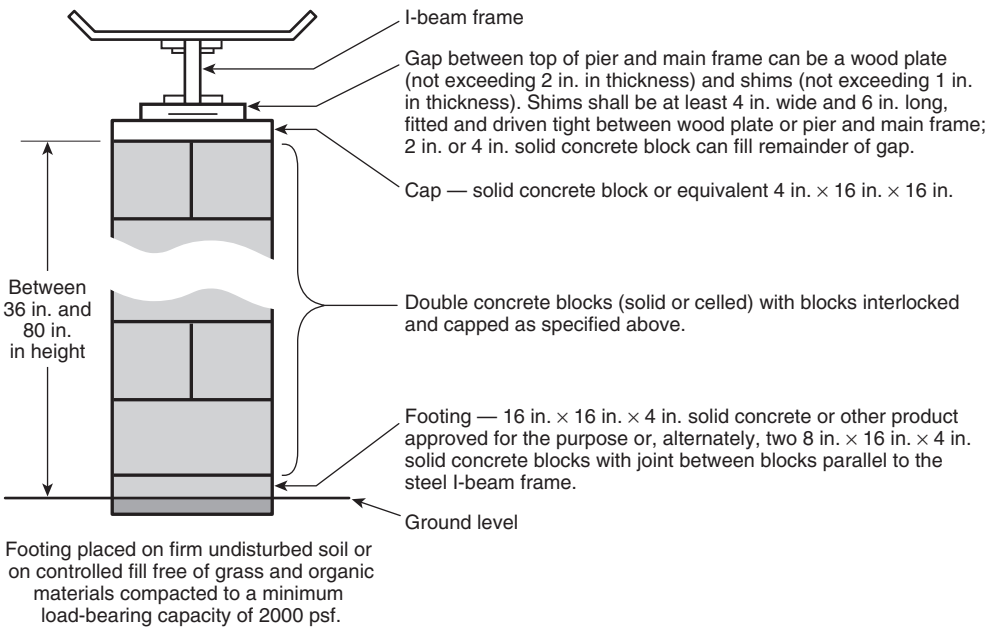

Note: For SI units, 1 in. = 25.4 mm, 1 psf = 0.04788 kN/m^2.

FIGURE 6.2.2.1(b) Typical Footing and Pier Installation — Greater than or Equal to 36 in. in Height.

6.2.3.1.3 Pier Capacities.

6.2.3.1.3.1 Table 6.2.3.1.2(a) and Table 6.2.3.1.2(b) for pier capacities shall be used when the manufacturer's installation instructions are not available.

6.2.3.1.3.2 Manufactured piers shall be rated at least to the capacities given in Table 6.2.3.1.2(a) and Table 6.2.3.1.2(b), and locally constructed piers shall be designed to transmit these loads safely as required by 6.2.3.2.

6.2.3.2 Configuration.

6.2.3.2.1 Concrete Blocks.

6.2.3.2.1.1* Concrete block piers shall be installed in accordance with Figure 6.2.2.1(a) and Figure 6.2.2.1(b).

6.2.3.2.1.2 Load-bearing (not decorative) concrete blocks shall have nominal dimensions of at least 8 in. × 8 in. × 16 in. (205 mm × 205 mm × 410 mm).

Documents
Document Sharing Hub
Full document details: NFPA 225 2017

Table 6.2.3.1.2(a) Minimum Pier Capacity, Frame Plus Perimeter Blocking (Both Frame and Perimeter Blocking Required)

Section Width (ft)	Roof Live Load (psf)	Pier Location	Minimum Pier Capacity (lb)			
			At Maximum Pier Spacing of 4 ft	At Maximum Pier Spacing of 6 ft	At Maximum Pier Spacing of 8 ft	At Maximum Pier Spacing of 10 ft
8	20	Frame	900	1,300	1,800	2,200
		Perimeter	600	800	1,100	1,400
	30	Frame	900	1,300	1,800	1,200
		Perimeter	700	1,100	1,400	1,800
	40	Frame	900	1,300	1,800	2,200
		Perimeter	900	1,300	1,800	2,200
10	20	Frame	1,100	1,700	2,200	2,800
		Perimeter	700	1,100	1,400	1,800
	30	Frame	1,100	1,700	2,200	2,800
		Perimeter	900	1,400	1,800	2,300
	40	Frame	1,100	1,700	2,200	2,800
		Perimeter	1,100	1,700	2,200	2,800
12	20	Frame	1,300	1,900	2,600	3,200
		Perimeter	800	1,200	1,600	2,000
	30	Frame	1,300	1,900	2,600	3,200
		Perimeter	1,100	1,600	2,100	2,600
	40	Frame	1,300	1,900	2,600	3,200
		Perimeter	1,300	1,900	2,600	3,200
14	20	Frame	1,500	2,200	3,000	3,700
		Perimeter	900	1,400	1,900	2,400
	30	Frame	1,500	2,200	3,000	3,700
		Perimeter	1,200	1,800	2,400	3,000
	40	Frame	1,500	2,200	3,000	3,700
		Perimeter	1,500	2,200	3,000	3,700
16	20	Frame	1,700	2,600	3,400	4,300
		Perimeter	1,100	1,600	2,200	2,700
	30	Frame	1,700	2,600	3,400	4,300
		Perimeter	1,400	2,100	2,800	3,500
	40	Frame	1,700	2,600	3,400	4,300
		Perimeter	1,700	2,600	3,400	4,300
18	20	Frame	1,900	2,900	3,900	4,800
		Perimeter	1,200	1,800	2,500	3,100
	30	Frame	1,900	2,900	3,900	4,800
		Perimeter	1,600	2,400	3,200	3,900
	40	Frame	1,900	2,900	3,900	4,800
		Perimeter	1,900	2,900	3,900	4,800

For SI units, 1 ft = 0.3048 m, 1 psf = 0.04788 kN/m^3, 1 lb = 4.448 N.

Notes:

(1) Frame blocking is the total of the frame weight plus perimeter weight.

(2) When using frame and perimeter blocking, the marriage lines of the multisection home are double the perimeter weight.

AVA Documents 2017 Edition Document Sharing Hub

Full document details: NFPA 225 2017

Table 6.2.3.1.2(b) Minimum Pier Capacity, Multisection Pier Loading Under Marriage Line

		Pier Load and Minimum Pier Capacity (lb)						
Section Width (ft)	Roof Live Load (psf)	For Mating Wall Opening of 5 ft	For Mating Wall Opening of 10 ft	For Mating Wall Opening of 15 ft	For Mating Wall Opening of 20 ft	For Mating Wall Opening of 25 ft	For Mating Wall Opening of 30 ft	For Mating Wall Opening of 35 ft
8	20	600	1,200	1,800	2,400	3,000	3,600	4,200
	30	800	1,600	2,400	3,200	4,000	4,800	5,600
	40	1,000	2,000	3,000	4,000	5,000	5,000	7,000
10	20	800	1,500	2,300	3,000	3,800	4,500	5,300
	30	1,000	2,000	3,000	4,000	5,000	6,000	7,000
	40	1,300	2,500	3,800	5,000	6,300	7,500	8,800
12	20	900	1,800	2,600	3,500	4,400	5,300	6,100
	30	1,200	2,300	3,500	4,700	5,800	7,000	8,200
	40	1,500	2,900	4,400	5,800	7,300	8,800	10,200
14	20	1,000	2,000	3,000	4,100	5,100	6,100	7,100
	30	1,400	2,700	4,100	5,400	6,800	8,100	9,500
	40	1,700	3,400	5,100	6,800	8,400	10,100	11,800
16	20	1,200	2,300	3,500	4,700	5,800	7,000	8,100
	30	1,600	3,100	4,700	6,200	7,800	9,300	10,900
	40	1,900	3,800	5,800	7,500	9,700	11,600	13,600

For SI units, 1 ft = 0.3048 m, 1 psf = 0.04788 kN/m^3, 1 lb = 4.448 N.

Notes:

(1) Example: For a 14 ft section width, 30 psf roof live load, and 18 ft wide mating wall opening, follow down the "Section Width" column to 14 ft. Follow across to 30 psf in the "Roof Live Load" column. Since the mating wall opening is 18 ft wide, follow across to the column headed "20." (For any opening width that is not shown, use the next higher number on the chart.) The required pier capacity is 5400 lb.

(2) Sidewall opening pier capacity is one-half the mating wall opening weight of an identical or next larger span. For piers supporting two adjacent openings, the capacity is the combination of the weights from each opening.

6.2.3.2.1.3 The concrete blocks shall be stacked with their hollow cells aligned vertically.

6.2.3.2.1.4 When piers are constructed of blocks stacked side by side, each layer shall be at right angles to the preceding one, as shown in Figure 6.2.2.1(a) and Figure 6.2.2.1(b).

6.2.3.2.2 Caps.

6.2.3.2.2.1 Structural loads shall be evenly distributed across capped hollow block piers, as shown in Figure 6.2.2.1(a) and Figure 6.2.2.1(b).

6.2.3.2.2.2 Caps shall be of solid masonry of at least 4 in. (100 mm) nominal thickness, or of dimensional lumber at least 2 in. (50 mm) nominal thickness, or of steel.

6.2.3.2.2.3 All caps shall be of the same length and width as the piers on which they rest.

6.2.3.2.3 Gaps.

6.2.3.2.3.1 Nominal 4 in. × 6 in. (100 mm × 150 mm) shims shall be used to level the home and fill any gaps between the base of the I-beam and the top of the pier cap.

6.2.3.2.3.2 Shims shall be used in pairs as shown in Figure 6.2.2.1(a) and Figure 6.2.2.1(b), and shims shall be driven in tightly so that they do not occupy more than 1 in. (25 mm) of vertical space.

6.2.3.2.3.3 Wood plates no thicker than 2 in. (50 mm) shall be used to fill in any remaining vertical gaps.

6.2.3.2.4 Pier Heights. Manufactured pier heights shall be selected so that the adjustable risers do not extend more than 2 in. (50 mm) when finally positioned.

6.2.3.3 Clearance Under Homes.

6.2.3.3.1 A minimum clearance of 12 in. (305 mm) shall be maintained beneath the lowest member of the main frame (I-beam or channel beam) in the area of utility connections.

6.2.3.3.2 No more than 25 percent of the lowest member of the main frame of the home shall be less than 12 in. (305 mm) above grade.

6.2.3.4 All cap and shim materials within 18 in. (455 mm) of the ground shall be preservative-treated wood, naturally durable wood species, or equivalent.

6.2.4 Design Procedures for Concrete Block Piers.

6.2.4.1 Piers Less Than 36 in. (915 mm) High.

6.2.4.1.1 Piers less than 36 in. (915 mm) high shall be permitted to be constructed of single, open, or closed-cell concrete blocks, 8 in. × 8 in. × 16 in. (205 mm × 205 mm × 410 mm).

6.2.4.1.2 The piers shall be installed so that the long sides are at right angles to the supported I-beam, as shown in Figure 6.2.2.1(a) and Figure 6.2.2.1(b).

6.2.4.1.3 Open cells shall be positioned at right angles to the footers.

Documents
Document Sharing Hub
Full document details: NFPA 225 2017

6.2.4.1.4 Horizontal offsets shall not exceed ½ in. (13 mm) top to bottom.

6.2.4.1.5* Mortar shall not normally be required.

6.2.4.1.6 Manufactured piers shall be listed and labeled.

6.2.4.2 Piers 36 in. (915 mm) to 80 in. (2030 mm) High and Corner Piers. All piers between 36 in. (915 mm) and 80 in. (2030 mm) high and all corner piers over three blocks high shall be constructed out of double, interlocked concrete blocks as shown in Figure 6.2.2.1(a) and in Figure 6.2.2.1(b).

6.2.4.3 Piers over 80 in. (2030 mm) High. Piers over 80 in. (2030 mm) high shall be designed by a registered professional engineer.

6.2.4.4 Elevated Homes. When more than one-fourth of the area of a home is installed so that the bottom of the main frame members are more than 36 in. (915 mm) above ground level, the home stabilizing devices shall be designed by a qualified registered professional engineer.

6.2.5 Location and Spacing.

6.2.5.1 The location and spacing of piers shall depend upon the dimensions and weight of the home, the roof load zone, the type of construction (single- or multisection), and such other factors as the location of doors or other openings.

6.2.5.2 Piers shall be no more than 2 ft (610 mm) from either end and not more than 10 ft (3048 mm) center to center under the main frame beam.

6.2.5.3* Single-Section Homes. The recommended location and spacing of piers for a single-section home shown in Figure 6.2.5.3 shall be used when the manufacturer's installation instructions are not available.

6.2.5.4* Multisection Homes. The recommended location and spacing of piers for a multisection home shown in Figure 6.2.5.4 shall be used when the manufacturer's installation instructions are not available.

6.2.5.5* Perimeter Blocking. Supports shall be placed on both sides of side wall exterior doors and any other side wall openings greater than 48 in. (1220 mm) (such as entry and sliding glass doors), and under porch posts, factory installed fireplaces, and wood stoves.

6.3 Footings. Footing materials shall conform to Section 6.3, and other materials approved for footings shall be permitted to be used when approved by the AHJ if they provide equal load-bearing capacity and resistance to decay. Footings shall be placed on undisturbed soil or compacted fill. Every pier shall be supported by a footing.

6.3.1 Acceptable Types of Footings.

6.3.1.1 Concrete. Footings shall be permitted to consist of either of the following:

(1) 4 in. (100 mm) nominal precast concrete pads meeting or exceeding ASTM C90, *Standard Specification for Load-bearing Concrete Masonry Units,* without reinforcement, with at least a 28-day compressive strength of 3000 psi (20.7 MN/m^2)
(2) 6 in. (150 mm) cast-in-place concrete pads, slabs, or ribbons with at least a 28-day compressive strength of 3000 psi (20.7 MN/m^2)

6.3.1.2 Pressure-Treated Permanent Wood.

6.3.1.2.1 A minimum of two layers of nominal 2 in. (50 mm) thick pressure-treated wood having 0.60 pcf (94 N/m^3) retention, with the long dimensions of the second layer placed under the pier and perpendicular to that of the first layer, shall be used.

6.3.1.2.2 Pressure-treated footings shall be permitted to consist of nominal 2 in. (50 mm) thick pressure-treated wood or a single layer of a minimum thickness of ¾ in. (19 mm) and a maximum size of 16 in. × 16 in. (410 mm × 410 mm), or, for larger sizes, two pieces of nominal ¾ in. thick (22/32 actual) (19 mm) plywood (APA-rated sheathing, exposure 1, PS1) pressure-treated for soil contact.

6.3.1.3 ABS Footing Pads.

6.3.1.3.1 ABS footing pads shall be permitted in accordance with pad manufacturer installation instructions.

6.3.1.3.2 ABS footing pads shall be listed or labeled for the required load capacity.

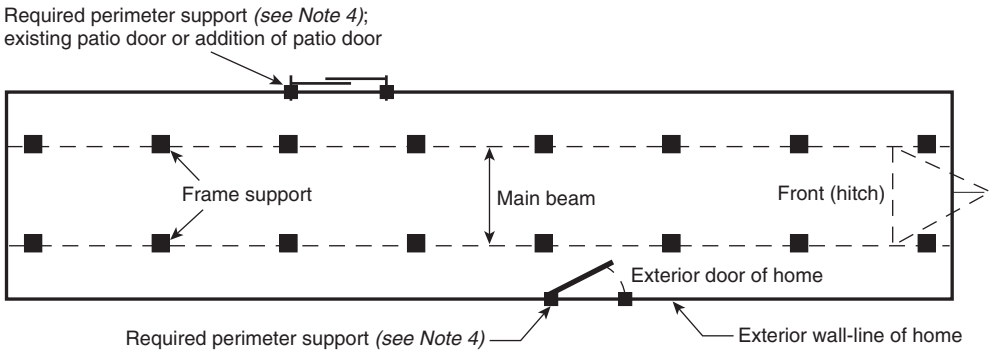

Notes:
(1) See Table 6.2.3.1.2(a) for required pier capacity and spacing.
(2) See Table 6.2.3.1.2(b) and Section 6.3 for footing requirements.
(3) Locate piers a maximum of 24 in. (610 mm) from both ends.
(4) Place piers on both sides of entry doors, at any other openings greater than 48 in. (1220 mm) width, such as patio or atrium doors, and under porch posts, factory-installed fireplaces, and wood stoves.

FIGURE 6.2.5.3 Typical Blocking Diagram for Single Section.

AVA Documents 2017 Edition Document Sharing Hub
Full document details: NFPA 225 2017

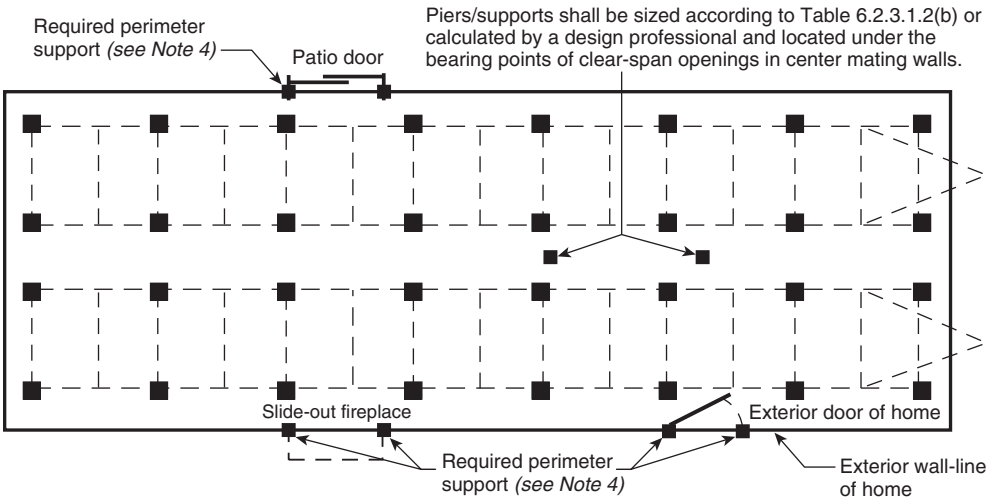

Notes:
(1) See Table 6.2.3.1.2(a) for required pier capacity and spacing.
(2) See Table 6.2.3.1.2(b) and Section 6.3 for footing requirements.
(3) Locate piers a maximum of 24 in. (610 mm) from both ends.
(4) Place piers on both sides of entry doors, at any other openings greater than 48 in. (1220 mm) width, such as patio or atrium doors, and under porch posts, factory-installed fireplaces, and wood stoves.

FIGURE 6.2.5.4 Typical Blocking Diagram for Multisection Homes.

6.3.2 Placement in Freezing Climates.

6.3.2.1 Conventional Footings. Footings placed in freezing climates shall comply with 6.3.2.1.1, 6.3.2.1.2, or 6.3.2.1.3.

6.3.2.1.1 In areas subject to ground frost heave, footings shall be placed below the frost line.

6.3.2.1.2 Local authorities shall be consulted to determine the depth of the frost line.

6.3.2.1.3 In the absence of a local code, the frost penetration map provided in Figure 6.3.2.1.3 shall be used as a guide.

6.3.2.2 Floating Slab Systems.

6.3.2.2.1 When properly designed by a registered professional engineer, a "floating slab system" shall be permitted to be used above the frost line.

6.3.2.2.2 The design shall accommodate the anchorage requirements identified in Section 7.5.

6.3.2.3* Insulated Foundations.

6.3.2.3.1 Footings shall be permitted to be placed above the frost line when the home is provided with a perimeter foundation or skirting having insulation properties sufficient to prevent freezing of the soil under or adjacent to every load-bearing component of the foundation and acceptable for this purpose to the authority having jurisdiction.

6.3.2.3.2 Insulation systems shall be compatible with the requirement to cross-ventilate the entire space under the home.

6.3.3* Sizing of Footings. The sizing of footings depends on the load-bearing capacity of both the piers and the soil. It shall be permitted to construct footings in accordance with Table 6.3.3.

6.3.4* Combination Systems. Support systems that combine both load-bearing capacity and uplift resistance shall also be sized for the applicable design loads.

6.4 Permanent Foundations.

6.4.1 Designs for permanent foundations (such as basements, crawl spaces, or load-bearing perimeter foundations) shall be designed by a registered professional engineer and constructed in accordance with local codes.

6.4.2 When no such design is available from the home manufacturer or covered in the state building code, a registered professional engineer shall be consulted in order to obtain a design to satisfy the house support requirements.

6.5 Special Considerations.

6.5.1 Severe Climatic Conditions. The provisions of 7.5.4 shall be required when the conditions in 7.5.4 exist at the home installation site.

6.5.2 Special Snow Load Conditions. Homes designed for and located in areas with roof live loads greater than 40 psf (1.9 kPa) shall be installed according to the home manufacturer's installation instructions or designed by a registered professional engineer.

Documents
Document Sharing Hub
Full document details: NFPA 225 2017