NFPA® 780

Standard for the Installation of Lightning Protection Systems

2008 Edition

NFPA, 1 Batterymarch Park, Quincy, MA 02169-7471
An International Codes and Standards Organization

Documents
Document Sharing Hub

Full document details: NFPA 780 2008

IMPORTANT NOTICES AND DISCLAIMERS CONCERNING NFPA DOCUMENTS

NOTICE AND DISCLAIMER OF LIABILITY CONCERNING THE USE OF NFPA DOCUMENTS

NFPA codes, standards, recommended practices, and guides, of which the document contained herein is one, are developed through a consensus standards development process approved by the American National Standards Institute. This process brings together volunteers representing varied viewpoints and interests to achieve consensus on fire and other safety issues. While the NFPA administers the process and establishes rules to promote fairness in the development of consensus, it does not independently test, evaluate, or verify the accuracy of any information or the soundness of any judgments contained in its codes and standards.

The NFPA disclaims liability for any personal injury, property or other damages of any nature whatsoever, whether special, indirect, consequential or compensatory, directly or indirectly resulting from the publication, use of, or reliance on this document. The NFPA also makes no guaranty or warranty as to the accuracy or completeness of any information published herein.

In issuing and making this document available, the NFPA is not undertaking to render professional or other services for or on behalf of any person or entity. Nor is the NFPA undertaking to perform any duty owed by any person or entity to someone else. Anyone using this document should rely on his or her own independent judgment or, as appropriate, seek the advice of a competent professional in determining the exercise of reasonable care in any given circumstances.

The NFPA has no power, nor does it undertake, to police or enforce compliance with the contents of this document. Nor does the NFPA list, certify, test or inspect products, designs, or installations for compliance with this document. Any certification or other statement of compliance with the requirements of this document shall not be attributable to the NFPA and is solely the responsibility of the certifier or maker of the statement.

AVA Documents
Document Sharing Hub

Full document details: NFPA 780 2008

ADDITIONAL NOTICES AND DISCLAIMERS

Updating of NFPA Documents

Users of NFPA codes, standards, recommended practices, and guides should be aware that these documents may be superseded at any time by the issuance of new editions or may be amended from time to time through the issuance of Tentative Interim Amendments. An official NFPA document at any point in time consists of the current edition of the document together with any Tentative Interim Amendments and any Errata then in effect. In order to determine whether a given document is the current edition and whether it has been amended through the issuance of Tentative Interim Amendments or corrected through the issuance of Errata, consult appropriate NFPA publications such as the National Fire Codes® Subscription Service, visit the NFPA website at www.nfpa.org, or contact the NFPA at the address listed below.

Interpretations of NFPA Documents

A statement, written or oral, that is not processed in accordance with Section 6 of the Regulations Governing Committee Projects shall not be considered the official position of NFPA or any of its Committees and shall not be considered to be, nor be relied upon as, a Formal Interpretation.

Patents

The NFPA does not take any position with respect to the validity of any patent rights asserted in connection with any items which are mentioned in or are the subject of NFPA codes, standards, recommended practices, and guides, and the NFPA disclaims liability for the infringement of any patent resulting from the use of or reliance on these documents. Users of these documents are expressly advised that determination of the validity of any such patent rights, and the risk of infringement of such rights, is entirely their own responsibility.

NFPA adheres to applicable policies of the American National Standards Institute with respect to patents. For further information contact the NFPA at the address listed below.

Law and Regulations

Users of these documents should consult applicable federal, state, and local laws and regulations. NFPA does not, by the publication of its codes, standards, recommended practices, and guides, intend to urge action that is not in compliance with applicable laws, and these documents may not be construed as doing so.

Copyrights

This document is copyrighted by the NFPA. It is made available for a wide variety of both public and private uses. These include both use, by reference, in laws and regulations, and use in private self-regulation, standardization, and the promotion of safe practices and methods. By making this document available for use and adoption by public authorities and private users, the NFPA does not waive any rights in copyright to this document.

Use of NFPA documents for regulatory purposes should be accomplished through adoption by reference. The term “adoption by reference” means the citing of title, edition, and publishing information only. Any deletions, additions, and changes desired by the adopting authority should be noted separately in the adopting instrument. In order to assist NFPA in following the uses made of its documents, adopting authorities are requested to notify the NFPA (Attention: Secretary, Standards Council) in writing of such use. For technical assistance and questions concerning adoption of NFPA documents, contact NFPA at the address below.

For Further Information

All questions or other communications relating to NFPA codes, standards, recommended practices, and guides and all requests for information on NFPA procedures governing its codes and standards development process, including information on the procedures for requesting Formal Interpretations, for proposing Tentative Interim Amendments, and for proposing revisions to NFPA documents during regular revision cycles, should be sent to NFPA headquarters, addressed to the attention of the Secretary, Standards Council, NFPA, 1 Batterymarch Park, P.O. Box 9101, Quincy, MA 02269-9101.

For more information about NFPA, visit the NFPA website at www.nfpa.org.

Documents
Document Sharing Hub

Full document details: NFPA 780 2008

Copyright © 2007 National Fire Protection Association®. All Rights Reserved.

NFPA® 780

Standard for the

Installation of Lightning Protection Systems

2008 Edition

This edition of NFPA 780, *Standard for the Installation of Lightning Protection Systems*, was prepared by the Technical Committee on Lightning Protection and acted on by NFPA at its June Association Meeting held June 3–7, 2007, in Boston, MA. It was issued by the Standards Council on July 26, 2007, with an effective date of August 15, 2007, and supersedes all previous editions.

This edition of NFPA 780 was approved as an American National Standard on August 15, 2007.

Origin and Development of NFPA 780

NFPA first adopted *Specifications for Protection of Buildings Against Lightning* in 1904. Revised standards were adopted in 1905, 1906, 1925, 1932, and 1937. In 1945, the NFPA Committee and the parallel ASA Committee on Protection Against Lightning were reorganized and combined under the sponsorship of NFPA, the National Bureau of Standards, and the American Institute of Electrical Engineers (now the IEEE). In 1946, NFPA acted to adopt Part III and in 1947 published a revised edition incorporating this part. Further revisions recommended by the Committee were adopted by NFPA in 1949, 1950, 1951, 1952, 1957, 1959, 1963, 1965, 1968, 1975, 1977, 1980, 1983, 1986, 1989, and 1992.

Commencing with the 1992 edition of the *Lightning Protection Code*, the NFPA numerical designation of the document was changed from NFPA 78 to NFPA 780.

With the issuance of the 1995 edition, the name of the document was changed from *Lightning Protection Code* to *Standard for the Installation of Lightning Protection Systems*. This change was directed by the Standards Council in order to make the title more accurately reflect the document's content. In addition, the Council directed certain changes to the scope of the document in order to clarify that the document did not cover lightning protection installation requirements for early streamer emission systems or lightning dissipater array systems.

The 1997 edition of NFPA 780 incorporated editorial changes to make the document more user friendly.

In issuing this document, the Standards Council has noted that lightning is a stochastic, if not capricious, natural process. Its behavior is not yet completely understood. This standard is intended to provide requirements, within the limits of the current state of knowledge, for the installation of those lightning protection systems covered by the standard.

The 2000 edition of NFPA 780 was amended to provide requirements for open structures such as those found on golf courses. A 1998 lightning flash density chart replaced the 1972 lightning frequency isoceraunic chart.

The 2004 edition of NFPA 780 reflected an extensive editorial revision of the standard to comply with the concurrent edition of the *NFPA Manual of Style for Technical Committee Documents*. These revisions included the addition of three administrative chapters at the beginning of the standard: "Administration," "Referenced Publications," and "Definitions." Five technical chapters followed the administrative chapters in the same sequence as in the 2000 edition. Other editorial revisions included the breakout of paragraphs with multiple requirements to individually numbered paragraphs for each requirement, the minimization of use of exceptions, the use of consistent headings for sections and section subdivisions, and reorganization to limit paragraph numbering to six digits. The International System of Units, commonly known as SI or metric, was used throughout the document. The appendixes were renamed annexes and reordered in a more logical sequence.

NFPA and National Fire Protection Association are registered trademarks of the National Fire Protection Association, Quincy, Massachusetts, 02169.

Documents Document Sharing Hub

Full document details: NFPA 780 2008

The 2004 edition also contained a number of technical revisions throughout the standard. These included the following: a main conductor, solid strip, was added for Class II material requirements for ordinary structures exceeding 75 ft in height; handrails could be used as a substitute for down conductors; additional separation between ground rods was required where multiple ground rods are used; additional guidance was provided for those instances where it is necessary to install the grounding conductor directly on bedrock; the section entitled "Surge Suppression" was entirely rewritten; titanium strike termination devices were permitted to be used; and in Annex K the term *Faraday cage* was replaced with *metallic cage*.

The 2008 edition provides requirements for surge protective devices to be installed at all power service entrances, at the entrance of conductive communications systems and antenna systems, and where an electrical or electronic system conductor leaves the structure.

A new definition for Lightning Protection System is provided, which now includes "conductive structural members." Clarification is provided relative to the use of ancillary metal parts that cannot be substituted for the main conductor. Strike termination devices include air terminals, metal masts, certain permanent metal parts of structures, and elevated conductors. Revisions now clarify that metal masts and overhead ground wires are included in the requirements of Chapter 4.

Significant changes have been made to the requirements for the use of bimetallic clamps and aluminum in proximity to earth. The standard has long required grounding electrodes be located near the outside perimeter of the structure, and in the 2008 edition additional guidance is provided to assist the system designer. Changes have also been made to better address the requirements for grounding electrodes in shallow topsoil applications.

The requirements for the use of multiple ground rods have been revised. Revisions have also been made in numerous areas of the standard for clarity and to enhance its usability. Revisions to the graphs and formulas for the rolling sphere method have been made to facilitate their use in metric units.

Requirements have been added to address proper installation of lightning protection equipment on large rooftop mechanical units. The installation of air terminals and main-size conductors in these applications are quantified and detailed.

Revisions have been made to enhance and clarify the requirements for bonding together of all grounded media and underground metallic piping. The intent is to provide for potential equalization and not to use the metallic piping as a lightning protection system grounding electrode. All grounding media and buried metallic conductors that may assist in providing a path for lightning currents in or on a structure must be interconnected to provide a common ground potential. Guidance is provided on the use of isolating spark gaps.

Significant changes have been made to the requirements pertaining to the conductors and other lightning protection system hardware used near the top of a heavy-duty stack.

Other significant changes include a complete rewrite of Chapter 8, Protection for Watercraft, providing a number of technical revisions; more user information has been added in Annex B, Principles of Lightning Protection; and Annex F, Protection for Trees, has been revised.

Documents
Document Sharing Hub
Full document details: NFPA 780 2008

Technical Committee on Lightning Protection

John M. Tobias, *Chair*
U.S. Department of the Army, NJ [U]

Gerard M. Berger, CNRS-Supelec, France [SE]
Matthew Caie, ERICO, Inc., OH [M]
Josephine Covino, U.S. Department of Defense, VA [E]
Ignacio T. Cruz, Cruz Associates, Inc., VA [SE]
Robert F. Daley, U.S. Department of Energy, NM [U]
Joseph P. DeGregoria, Underwriters Laboratories Inc., NY [RT]
Douglas J. Franklin, Thompson Lightning Protection Inc., MN [M]
William Goldbach, Danaher Power Solutions, VA [M]
Mitchell Guthrie, Consulting Engineer, NC [SE]
Thomas R. Harger, Harger Lightning Protection Inc., IL [M]
William E. Heary, Lightning Preventors of America Inc., NY [IM]
Bruce A. Kaiser, Lightning Master Corporation, FL [M]
Joseph A. Lanzoni, Lightning Eliminators & Consultants Inc., CO [M]
Eduardo Mariani, CIMA Ingenieria SRL, Argentina [SE]
David E. McAfee, Fire and Lightning Consultants, TN [SE]
Robley B. Melton, Jr., CSI Telecommunications, GA [U]
Rep. Alliance for Telecommunications Industry Solutions
Victor Minak, ExxonMobil Research & Engineering Company, VA [U]
Rep. American Petroleum Institute
Mark P. Morgan, East Coast Lightning Equipment, Inc., CT [M]
Terrance K. Portfleet, Michigan Lightning Protection Inc., MI [IM]
Rep. United Lightning Protection Association, Inc.
Vladimir A. Rakov, University of Florida, FL [SE]
Robert W. Rapp, National Lightning Protection Corporation, CO [M]
Dick Reehl, Qwest Communications, WA [U]
William Rison, New Mexico Institute of Mining & Technology, NM [SE]
Lon D. Santis, Institute of Makers of Explosives, DC [U]
Larry W. Strother, U.S. Air Force, FL [E]
Harold VanSickle, III, Lightning Protection Institute, MO [IM]
Charles L. Wakefield, U.S. Department of the Navy, MD [E]
Donald W. Zipse, Zipse Electrical Engineering Inc., PA [U]
Rep. Institute of Electrical & Electronics Engineers, Inc.

Alternates

Charles H. Ackerman, East Coast Lightning Equipment Inc., CT [M]
(Alt. to M. P. Morgan)
Richard W. Bouchard, Underwriters Laboratories Inc., CO [RT]
(Alt. to J. P. DeGregoria)
Peter A. Carpenter, Lightning Eliminators & Consultants Inc., CO [M]
(Alt. to J. A. Lanzoni)
Franco D'Alessandro, ERICO, Inc., OH [M]
(Alt. to M. Caie)
Dennis P. Dillon, Bonded Lightning Protection, Inc., FL [IM]
(Alt. to H. VanSickle, III)
Dennis Dyl, Kragh Engineering Inc., IL [SE]
(Voting Alt.)
Mark S. Harger, Harger Lightning & Grounding, IL [M]
(Alt. to T. R. Harger)
Kenneth P. Heary, Lightning Preventor of America Inc., NY [IM]
(Alt. to W. E. Heary)
Stephen Humeniuk, Warren Lightning Rod Company, NJ [IM]
(Alt. to T. K. Portfleet)
Christopher R. Karabin, U.S. Department of the Navy, MD [E]
(Alt. to C. L. Wakefield)
David John Leidel, Halliburton Energy Services, TX [U]
(Alt. to L. D. Santis)
Charles B. Moore, New Mexico Institute of Mining & Technology, NM [SE]
(Alt. to W. Rison)
Melvin K. Sanders, Things Electrical Co., Inc. (TECo., Inc.), IA [U]
(Alt. to D. W. Zipse)
Allan P. Steffes, Thompson Lightning Protection Inc., MN [M]
(Alt. to D. J. Franklin)
Paul R. Svendsen, National Lightning Protection Corporation, CO [M]
(Alt. to R. W. Rapp)

Richard J. Roux, NFPA Staff Liaison

This list represents the membership at the time the Committee was balloted on the final text of this edition. Since that time, changes in the membership may have occurred. A key to classifications is found at the back of the document.

NOTE: Membership on a committee shall not in and of itself constitute an endorsement of the Association or any document developed by the committee on which the member serves.

Committee Scope: This Committee shall have primary responsibility for documents on the protection from lightning of buildings and structures, recreation and sports areas, and any other situations involving danger from lightning to people or property, except those concepts utilizing early streamer emission air terminals. The protection of electric generating, transmission, and distribution systems is not within the scope of this Committee.

AVA Documents Document Sharing Hub
2008 Edition
Full document details: NFPA 780 2008

Contents

Chapter 1 Administration 780– 6
1.1 Scope 780– 6
1.2 Purpose 780– 6
1.3 Listed, Labeled, or Approved Components 780– 6
1.4 Mechanical Execution of Work 780– 6
1.5 Maintenance 780– 6
1.6 Metric Units of Measurement 780– 6

Chapter 2 Referenced Publications 780– 6
2.1 General 780– 6
2.2 NFPA Publications 780– 6
2.3 Other Publications 780– 6
2.4 References for Extracts in Mandatory Sections 780– 6

Chapter 3 Definitions 780– 6
3.1 General 780– 6
3.2 NFPA Official Definitions 780– 6
3.3 General Definitions 780– 7

Chapter 4 Protection for Ordinary Structures 780– 8
4.1 General 780– 8
4.2 Materials 780– 9
4.3 Corrosion Protection 780– 9
4.4 Mechanical Damage or Displacement 780–10
4.5 Use of Aluminum 780–10
4.6 Strike Termination Devices 780–10
4.7 Zones of Protection. 780–11
4.8 Strike Termination Devices on Roofs 780–12
4.9 Conductors 780–15
4.10 Conductor Fasteners 780–17
4.11 Masonry Anchors 780–17
4.12 Connector Fittings 780–17
4.13 Grounding Electrodes 780–18
4.14 Common Grounding 780–19
4.15 Concealed Systems 780–19
4.16 Structural Steel Systems 780–20
4.17 Metal Antenna Masts and Supports 780–20
4.18 Surge Protection 780–20
4.19 Metal Bodies 780–21
4.20 Potential Equalization 780–22
4.21 Bonding of Metal Bodies 780–22

Chapter 5 Protection for Miscellaneous Structures and Special Occupancies 780–23
5.1 General 780–23
5.2 Masts, Spires, Flagpoles 780–23
5.3 Grain-, Coal-, and Coke-Handling and Processing Structures 780–23
5.4 Metal Towers and Tanks 780–23
5.5 Air-Inflated Structures 780–23
5.6 Concrete Tanks and Silos 780–23
5.7 Guyed Structures 780–23
5.8 Wind Turbines 780–24

Chapter 6 Protection for Heavy-Duty Stacks 780–24
6.1 General 780–24
6.2 Materials 780–24
6.3 Strike Termination Devices 780–24
6.4 Conductors 780–24
6.5 Fasteners 780–25
6.6 Splices 780–25
6.7 Reinforced Concrete Stacks 780–25
6.8 Bonding of Metal Bodies 780–25
6.9 Grounding 780–25
6.10 Metal Stacks 780–25
6.11 Metal Guy Wires and Cables 780–25

Chapter 7 Protection for Structures Containing Flammable Vapors, Flammable Gases, or Liquids That Can Give Off Flammable Vapors 780–25
7.1 Reduction of Damage 780–25
7.2 Fundamental Principles of Protection 780–26
7.3 Protective Measures 780–26
7.4 Protection of Specific Classes of Structures 780–28

Chapter 8 Protection for Watercraft 780–29
8.1 General 780–29
8.2 Materials 780–29
8.3 Strike Termination 780–29
8.4 Conductors 780–29
8.5 Grounding 780–31

Annex A Explanatory Material 780–32

Annex B Principles of Lightning Protection 780–36

Annex C Explanation of Bonding Principles 780–39

Annex D Inspection and Maintenance of Lightning Protection Systems 780–41

Annex E Ground Measurement Techniques 780–42

Annex F Protection for Trees 780–43

Annex G Protection for Picnic Grounds, Playgrounds, Ball Parks, and Other Open Places 780–44

Annex H Protection for Livestock in Fields 780–44

Annex I Protection for Parked Aircraft 780–45

Annex J Reserved 780–45

Documents
Document Sharing Hub
Full document details: NFPA 780 2008

Annex K Protection of Structures Housing Explosive Materials **780**–46

Annex L Lightning Risk Assessment **780**–47

Annex M Guide for Personal Safety from Lightning **780**–51

Annex N Wind Turbine Generator Systems **780**–52

Annex O Informational References **780**–53

Index **780**–55

2008 Edition
Documents
Document Sharing Hub
Full document details: NFPA 780 2008

NFPA 780

Standard for the

Installation of Lightning Protection Systems

2008 Edition

IMPORTANT NOTE: This NFPA document is made available for use subject to important notices and legal disclaimers. These notices and disclaimers appear in all publications containing this document and may be found under the heading "Important Notices and Disclaimers Concerning NFPA Documents." They can also be obtained on request from NFPA or viewed at www.nfpa.org/disclaimers.

NOTICE: An asterisk (*) following the number or letter designating a paragraph indicates that explanatory material on the paragraph can be found in Annex A.

Changes other than editorial are indicated by a vertical rule beside the paragraph, table, or figure in which the change occurred. These rules are included as an aid to the user in identifying changes from the previous edition. Where one or more complete paragraphs have been deleted, the deletion is indicated by a bullet (•) between the paragraphs that remain.

A reference in brackets [ ] following a section or paragraph indicates material that has been extracted from another NFPA document. As an aid to the user, the complete title and edition of the source documents for extracts in mandatory sections of the document are given in Chapter 2 and those for extracts in informational sections are given in Annex O. Editorial changes to extracted material consist of revising references to an appropriate division in this document or the inclusion of the document number with the division number when the reference is to the original document. Requests for interpretations or revisions of extracted text shall be sent to the technical committee responsible for the source document.

Information on referenced publications can be found in Chapter 2 and Annex O.

Chapter 1 Administration

1.1 Scope.

1.1.1 This document shall cover traditional lightning protection system installation requirements for the following:

(1) Ordinary structures
(2) Miscellaneous structures and special occupancies
(3) Heavy-duty stacks
(4) Watercraft
(5) Structures containing flammable vapors, flammable gases, or liquids that give off flammable vapors

1.1.2* This document shall not cover lightning protection system installation requirements for the following:

(1) Explosives manufacturing buildings and magazines
(2) Electric generating, transmission, and distribution systems

1.1.3 This document shall not cover lightning protection system installation requirements for early streamer emission systems or charge dissipation systems.

1.2 Purpose. The purpose of this standard shall be to provide for the safeguarding of persons and property from hazards arising from exposure to lightning.

1.3 Listed, Labeled, or Approved Components. Where fittings, devices, or other components required by this standard are available as listed or labeled, such components shall be used.

1.4 Mechanical Execution of Work. Lightning protection systems shall be installed in a neat and workmanlike manner.

1.5* Maintenance. Recommended guidelines for the maintenance of the lightning protection system shall be provided to the owner at the completion of installation.

1.6 Metric Units of Measurement. Metric units of measurement in this standard shall be in accordance with the modernized metric system known as the International System of Units (SI).

1.6.1 If a value for measurement as given in this standard is followed by an equivalent value in other units, the first stated value shall be the requirement.

1.6.2 A given equivalent value shall be approximate.

Chapter 2 Referenced Publications

2.1 General. The documents or portions thereof listed in this chapter are referenced within this standard and shall be considered part of the requirements of this document.

2.2 NFPA Publications. National Fire Protection Association, 1 Batterymarch Park, Quincy, MA 02169-7471.

NFPA 70, *National Electrical Code®*, 2008 edition.

2.3 Other Publications.

Merriam-Webster's Collegiate Dictionary, 11th edition, Merriam-Webster, Inc., Springfield, MA, 2003.

2.4 References for Extracts in Mandatory Sections.

NFPA 70, *National Electrical Code®*, 2008 edition.
NFPA 115, *Standard for Laser Fire Protection*, 2003 edition.

Chapter 3 Definitions

3.1 General. The definitions contained in this chapter shall apply to the terms used in this standard. Where terms are not defined in this chapter or within another chapter, they shall be defined using their ordinarily accepted meanings within the context in which they are used. *Merriam-Webster's Collegiate Dictionary*, 11th edition, shall be the source for the ordinarily accepted meaning.

3.2 NFPA Official Definitions.

3.2.1* Approved. Acceptable to the authority having jurisdiction.

3.2.2* Authority Having Jurisdiction (AHJ). An organization, office, or individual responsible for enforcing the requirements of a code or standard, or for approving equipment, materials, an installation, or a procedure.

Documents
Document Sharing Hub
Full document details: NFPA 780 2008

3.2.3 Labeled. Equipment or materials to which has been attached a label, symbol, or other identifying mark of an organization that is acceptable to the authority having jurisdiction and concerned with product evaluation, that maintains periodic inspection of production of labeled equipment or materials, and by whose labeling the manufacturer indicates compliance with appropriate standards or performance in a specified manner.

3.2.4* Listed. Equipment, materials, or services included in a list published by an organization that is acceptable to the authority having jurisdiction and concerned with evaluation of products or services, that maintains periodic inspection of production of listed equipment or materials or periodic evaluation of services, and whose listing states that either the equipment, material, or service meets appropriate designated standards or has been tested and found suitable for a specified purpose.

3.2.5 Shall. Indicates a mandatory requirement.

3.2.6 Should. Indicates a recommendation or that which is advised but not required.

3.2.7 Standard. A document, the main text of which contains only mandatory provisions using the word "shall" to indicate requirements and which is in a form generally suitable for mandatory reference by another standard or code or for adoption into law. Nonmandatory provisions shall be located in an appendix or annex, footnote, or fine-print note and are not to be considered a part of the requirements of a standard.

3.3 General Definitions.

3.3.1* Air Terminal. A strike termination device that is a receptor for attachment of flashes to the lightning protection system and is listed for the purpose.

3.3.2 Bonding. An electrical connection between an electrically conductive object and a component of a lightning protection system that is intended to significantly reduce potential differences created by lightning currents.

3.3.3* Cable. A conductor formed of a number of wires stranded together.

3.3.4 Catenary Lightning Protection System. A lightning protection system consisting of one or more overhead ground wires.

3.3.5 Chimney. A construction containing one or more flues that does not meet the criteria defined for heavy-duty stack.

3.3.6* Combination Waveform Generator. A surge generator with a 2-ohm internal impedance producing a 1.2/50 µs open circuit voltage and an 8/20 µs short-circuit current waveshape.

3.3.7 Conductor.

3.3.7.1 ***Bonding Conductor.*** A conductor used for potential equalization between grounded metal bodies or electrically conductive objects and a lightning protection system.

3.3.7.2 ***Loop Conductor.*** A conductor encircling a structure that is used to interconnect grounding electrodes, main conductors, or other electrically conductive bodies.

3.3.7.3* ***Main Conductor.*** A conductor intended to be used to carry lightning currents between strike termination devices and grounding electrodes.

3.3.8 Copper-Clad Steel. Steel with a coating of copper bonded to it.

3.3.9 Discharge Current.

3.3.9.1 ***Maximum Discharge Current (I_{max}).*** The maximum instantaneous value of the current through the SPD having an 8/20 µs waveform.

3.3.9.2 ***Nominal Discharge Current (I_n).*** Peak value of 8/20 µs current waveform selected by the manufacturer for which an SPD remains functional after 15 surges.

3.3.10 Fastener. An attachment device used to secure the conductor to the structure.

3.3.11 Flame Protection. Self-closing gauge hatches, vapor seals, pressure-vacuum breather valves, flame arresters, or other effective means to minimize the possibility of flame entering the vapor space of a tank.

3.3.12* Flammable Air–Vapor Mixtures. Flammable vapors mixed with air in proportions that will cause the mixture to burn rapidly when ignited.

3.3.13 Flammable Vapors. A concentration of constituents in air that exceeds 10 percent of its lower flammable limit (LFL). [**115,** 2003]

3.3.14 Flash Point. The minimum temperature at which a liquid or a solid emits vapor sufficient to form an ignitible mixture with air near the surface of the liquid or the solid.

3.3.15 Gastight. Describes a structure so constructed that gas or air cannot enter or leave the structure except through vents or piping provided for the purpose.

3.3.16 Grounded (Grounding). Connected (connecting) to ground or to a conductive body that extends the ground connection. [**70:** Article 100]

3.3.17 Grounding Electrode. The portion of a lightning protection system, such as a ground rod, ground plate electrode, or ground conductor, that is installed for the purpose of providing electrical contact with the earth.

3.3.18 Heavy-Duty Stack. A smoke or vent stack with a flue that has a cross-sectional area of the flue greater than 0.3 m^2 (500 $in.^2$) and a height greater than 23 m (75 ft).

3.3.19* Lightning Protection System. A complete system of strike termination devices, conductors (which could include conductive structural members), grounding electrodes, interconnecting conductors, surge protective devices, and other connectors and fittings required to complete the system.

3.3.20 Liquid.

3.3.20.1 ***Class I Flammable Liquid.*** Any liquid that has a closed-cup flash point below 37.8°C (100°F) and a Reid vapor pressure not exceeding an absolute pressure of 276 kPa (40 psi) at 37.8°C (100°F).

3.3.20.2 ***Combustible Liquid.*** Any liquid that has a closed-cup flash point at or above 37.8°C (100°F).

3.3.21 Materials.

3.3.21.1* ***Class I Materials.*** Lightning conductors, air terminals, grounding electrodes, and associated fittings required for the protection of structures not exceeding 23 m (75 ft) in height.

AVA Documents Document Sharing Hub
Full document details: NFPA 780 2008

3.3.21.2* ***Class II Materials.*** Lightning conductors, air terminals, grounding electrodes, and associated fittings required for the protection of structures exceeding 23 m (75 ft) in height.

3.3.21.3 ***Explosive Materials.*** Materials, including explosives, blasting agents, and detonators, that are authorized for transportation by the Department of Transportation or the Department of Defense as explosive materials.

3.3.22 Sideflash. An electrical spark, caused by differences of potential, that occurs between conductive metal bodies or between conductive metal bodies and a component of a lightning protection system or ground.

3.3.23 Spark Gap. Any short air space between two conductors that are electrically insulated from or remotely electrically connected to each other.

3.3.24 Strike Termination Device. A component of a lightning protection system that intercepts lightning flashes and connects them to a path to ground. Strike termination devices include air terminals, metal masts, permanent metal parts of structures as described in Section 4.9, and overhead ground wires installed in catenary lightning protection systems.

3.3.25 Striking Distance. The distance over which the final breakdown of the initial lightning stroke to ground or to a grounded object occurs.

3.3.26 Structure.

3.3.26.1 ***Metal-Clad Structure.*** A structure with sides or roof, or both, covered with metal.

3.3.26.2 ***Metal-Framed Structure.*** A structure with electrically continuous structural members of sufficient size to provide an electrical path equivalent to that of lightning conductors.

3.3.27* Suppressed Voltage Rating (SVR). A specific measured limiting voltage rating assigned to a surge protective device (SPD).

3.3.28 Surge. A transient wave of current, potential, or power in an electric circuit. Surges do not include longer duration temporary overvoltages (TOV) consisting of an increase in the power frequency voltage for several cycles.

3.3.29 Surge Arrester. A protective device for limiting surge voltages by discharging or bypassing surge current; it also prevents continued flow of follow current while remaining capable of repeating these functions. [**70:** Article 100]

3.3.30 Surge Protective Device (SPD). A device composed of any combination of linear or nonlinear circuit elements intended for limiting surge voltages on equipment by diverting or limiting surge current.

3.3.31 Transient. A subcycle disturbance in the ac waveform that is evidenced by a sharp, brief discontinuity of the waveform. It can be of either polarity and can be additive to, or subtractive from, the nominal waveform.

3.3.32 Transient Voltage Surge Suppressor (TVSS). A protective device for limiting transient voltages by diverting or limiting surge current; it also prevents continued flow of follow current while remaining capable of repeating these functions.

3.3.33 Vapor Opening. An opening through a tank shell or roof that is above the surface of the stored liquid and that is provided for tank breathing, tank gauging, fire fighting, or other operating purposes.

3.3.34 Voltage.

3.3.34.1 ***Maximum Continuous Operating Voltage (MCOV).*** The maximum designated rms value of the power frequency voltage that can be continuously applied to the mode of protection of a surge protective device (SPD).

3.3.34.2 ***Measured Limiting Voltage (MLV).*** Maximum magnitude of voltage that is measured across the terminals of the surge protective device (SPD) during the application of impulses of specified waveshape and amplitude.

3.3.34.3 ***Nominal System Voltage.*** The nominal voltage (rms) of the power frequency supply.

3.3.34.4 ***Normal Operating Voltage.*** The normal ac power frequency voltage rating, as specified by the manufacturer, to which the SPD may be connected.

3.3.35 Voltage Protection Rating (VPR). A rating (or ratings) selected by the manufacturer based on the measured limiting voltage determined when the SPD is subjected to a combination waveform with an open circuit voltage of 6 kV and a short-circuit current of 3 kA . The value is rounded up to the next highest 100 V level.

3.3.36 Watercraft. All forms of boats and vessels up to 272 metric tons (300 gross tons) used for pleasure or commercial purposes, but excluding seaplanes, hovercraft, vessels with a cargo of flammable liquids, and submersible vessels.

3.3.37 Zone of Protection. The space adjacent to a lightning protection system that is substantially immune to direct lightning flashes.

Chapter 4 Protection for Ordinary Structures

4.1 General.

4.1.1 Ordinary Structures. An ordinary structure shall be any structure that is used for ordinary purposes, whether commercial, industrial, farm, institutional, or residential.

4.1.1.1 Ordinary structures shall be protected according to 4.1.1.1(A) or 4.1.1.1(B).

(A) Ordinary structures not exceeding 23 m (75 ft) in height shall be protected with Class I materials as shown in Table 4.1.1.1(A).

(B) Ordinary structures exceeding 23 m (75 ft) in height shall be protected with Class II materials as shown in Table 4.1.1.1(B).

4.1.1.2 If part of a structure exceeds 23 m (75 ft) in height (e.g., a steeple) and the remaining portion does not exceed 23 m (75 ft) in height, the requirements for Class II air terminals and conductors shall apply only to that portion exceeding 23 m (75 ft) in height.

4.1.1.3 Class II conductors from the higher portion shall be extended to ground and shall be interconnected with the balance of the system.

Documents
Document Sharing Hub
Full document details: NFPA 780 2008

Table 4.1.1.1(A) Minimum Class I Material Requirements

Type of Conductor	Parameter	Copper SI	Copper U.S.	Aluminum SI	Aluminum U.S.
Air terminal, solid	Diameter	9.5 mm	⅜ in.	12.7 mm	½ in.
Air terminal, tubular	Diameter	15.9 mm	⅝ in.	15.9 mm	⅝ in.
	Wall thickness	0.8 mm	0.033 in.	1.63 mm	0.064 in.
Main conductor, cable	Size each strand		17 AWG		14 AWG
	Weight per length	278 g/m	187 lb/1000 ft	141 g/m	95 lb/1000 ft
	Cross section area	29 mm^2	57,400 cir. mils	50 mm^2	98,600 cir. mils
Bonding conductor, cable (solid or stranded)	Size each strand		17 AWG		14 AWG
	Cross section area		26,240 cir. mils		41,100 cir. mils
Bonding conductor, solid strip	Thickness	1.30 mm	0.051 in.	1.63 mm	0.064 in.
	Width	12.7 mm	½ in.	12.7 mm	½ in.
Main conductor, solid strip	Thickness	1.30 mm	0.051 in.	1.63 mm	0.064 in.
	Cross section area	29 mm^2	57,400 cir. mils	50 mm^2	98,600 cir. mils

Table 4.1.1.1(B) Minimum Class II Material Requirements

Type of Conductor	Parameter	Copper SI	Copper U.S.	Aluminum SI	Aluminum U.S.
Air terminal, solid	Diameter	12.7 mm	½ in.	15.9 mm	⅝ in.
Main conductor, cable	Size each strand		15 AWG		13 AWG
	Weight per length	558 g/m	375 lb/1000 ft	283 g/m	190 lb/1000 ft
	Cross section area	58 mm^2	115,000 cir. mils	97 mm^2	192,000 cir. mils
Bonding conductor, cable (solid or stranded)	Size each strand		17 AWG		14 AWG
	Cross section area		26,240 cir. mils		41, 100 cir. mils
Bonding conductor, solid strip	Thickness	1.30 mm	0.051 in.	1.63 mm	0.064 in.
	Width	12.7 mm	½ in.	12.7 mm	½ in.
Main conductor, solid strip	Thickness	1.63 mm	0.064 in.	2.61 mm	0.1026 in.
	Cross section area	58 mm^2	115,000 cir. mils	97 mm^2	192,000 cir. mils

4.1.2 Roof Types and Pitch. For the purpose of this standard, protection for the various roof types shall be as shown in Figure 4.1.2.

4.1.2.1 Protection for a shed roof shall be as illustrated for the gable method in Figure 4.1.2.

4.1.2.2 For purposes of this standard, roof pitches shall be as shown in Figure 4.1.2.2.

4.2 Materials. Protection systems shall be made of materials that are resistant to corrosion or protected against corrosion.

4.2.1 Combinations of materials that form electrolytic couples of such a nature that, in the presence of moisture, corrosion is accelerated shall not be used.

4.2.2 One or more of the materials in 4.2.2.1 through 4.2.2.3 shall be used.

4.2.2.1 Copper. Copper shall be of the grade required for commercial electrical work and shall be of 95 percent conductivity when annealed.

4.2.2.2 Copper Alloys. Copper alloy shall be as resistant to corrosion as copper.

4.2.2.3 Aluminum.

(A) Aluminum shall not be used where contact with the earth is possible or where rapid deterioration is possible.

(B) Conductors shall be of electrical grade aluminum.

4.2.3 Copper lightning protection materials shall not be installed on or in contact with aluminum roofing, aluminum siding, or other aluminum surfaces.

4.2.4 Aluminum lightning protection materials shall not be installed on or in contact with copper surfaces.

4.3 Corrosion Protection.

4.3.1 Protection shall be provided against deterioration of lightning protection components due to local conditions.

4.3.2 Copper components installed within 600 mm (24 in.) of the top of a chimney or vent emitting corrosive gases shall be protected by a hot-dipped lead or tin coating.

4.3.3 Connectors and Fittings.

4.3.3.1 Connectors and fittings shall be compatible for use with the conductor and the surfaces on which they are installed.

4.3.3.2 Bimetallic connectors and fittings shall be used for splicing or bonding dissimilar metals.

AVA Documents Document Sharing Hub
Full document details: NFPA 780 2008

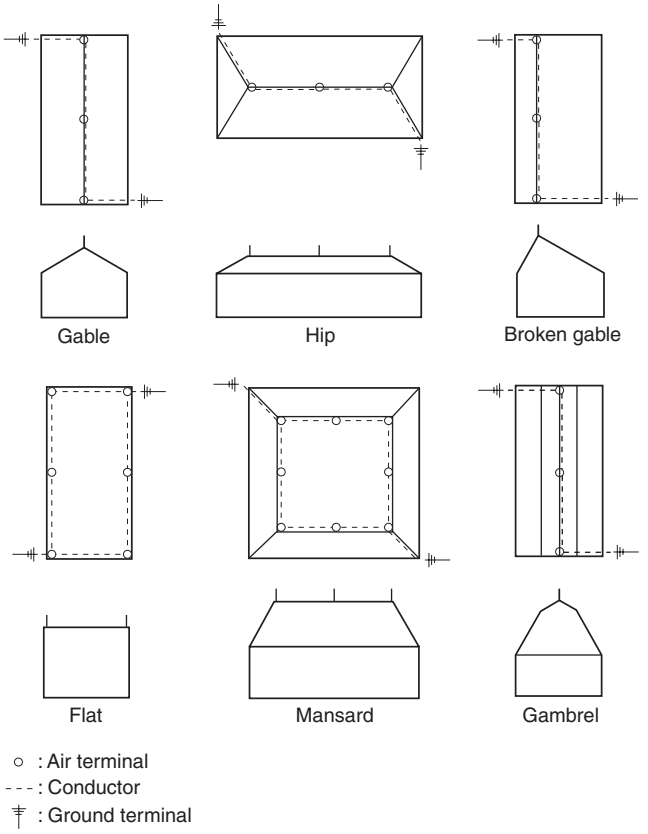

FIGURE 4.1.2 Roof Types: Protection Methods. (Drawings are top and end views of each roof type.)

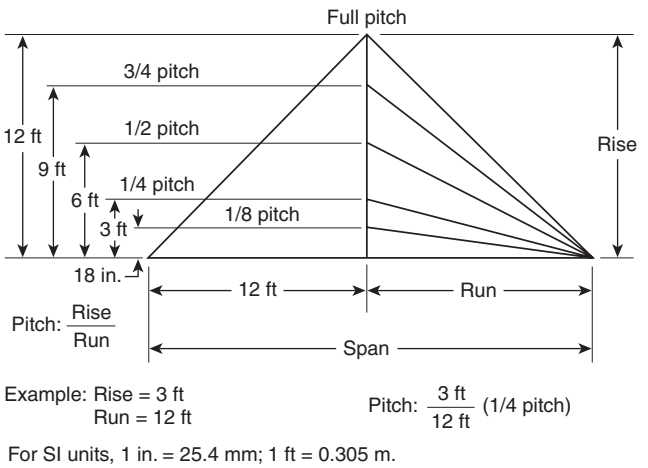

FIGURE 4.1.2.2 Roof Pitch.

4.4 Mechanical Damage or Displacement.

4.4.1 Any part of a lightning protection system that is subject to mechanical damage or displacement shall be protected with a protective molding or covering.

4.4.2 Where metal pipe or tubing is used around the conductor, the conductor shall be bonded to the pipe or tubing at both ends.

4.5 Use of Aluminum. Aluminum systems shall be installed in accordance with other applicable sections and 4.5.1 through 4.5.3.

4.5.1 Aluminum lightning protection equipment shall not be installed on or in direct contact with copper roofing materials or other copper surfaces, or where exposed to runoff from copper surfaces.

4.5.2 Aluminum materials shall not be used within 460 mm (18 in.) of the point where the lightning protection system conductor comes into contact with the earth.

4.5.2.1 Fittings used for the connection of aluminum down conductors to copper or copper-clad grounding equipment shall be of the bimetallic type.

4.5.2.2 Bimetallic connectors shall be installed not less than 460 mm (18 in.) above earth level.

4.5.3 An aluminum conductor shall not be attached to a surface coated with alkaline-base paint, embedded in concrete or masonry, or installed in a location subject to excessive moisture.

4.6 Strike Termination Devices.

4.6.1 General.

4.6.1.1 Strike termination devices include air terminals, metal masts, permanent metal parts of structures as described in Section 4.9, and overhead ground wires. Combination of these strike termination devices shall be permitted.

4.6.1.2 Strike termination devices shall be provided where required by other sections of this standard.

4.6.1.3 Metal parts of a structure that are exposed to direct lightning flashes and that have a metal thickness of 4.8 mm (3⁄16 in.) or greater shall require only connection to the lightning protection system.

4.6.1.4 Such connections shall provide a minimum of two paths to ground.

4.6.1.5 Strike termination devices shall not be required for those parts of a structure located within a zone of protection.

4.6.2* Air Terminal Height. The tip of an air terminal shall be not less than 254 mm (10 in.) above the object or area it is to protect, as shown in Figure 4.6.2.

4.6.3 Air Terminal Support.

4.6.3.1 Air terminals shall be secured against overturning or displacement by one of the following methods:

(1) Attachment to the object to be protected
(2) Braces that are permanently and rigidly attached to the structure

4.6.3.2 Air terminals exceeding 600 mm (24 in.) in height above the area or object they are to protect shall be supported at a point not less than one-half their height, as shown in Figure 4.6.3.2.

4.6.4 Ornaments.

4.6.4.1 An ornament or decoration on a freestanding, unbraced air terminal shall not present, in any plane, a wind-resistance area in excess of 0.01 m^2 (20 $in.^2$).

4.6.4.2 The requirement of 4.6.4.1 shall permit the use of an ornamental ball 127 mm (5 in.) or less in diameter.

Documents
Document Sharing Hub
Full document details: NFPA 780 2008

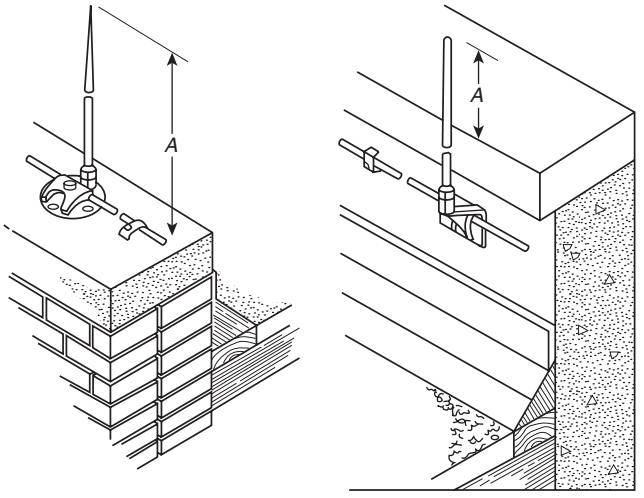

A: 254 mm (10 in.)
Note: Air terminal tip configurations can be sharp or blunt.

FIGURE 4.6.2 Air Terminal Height.

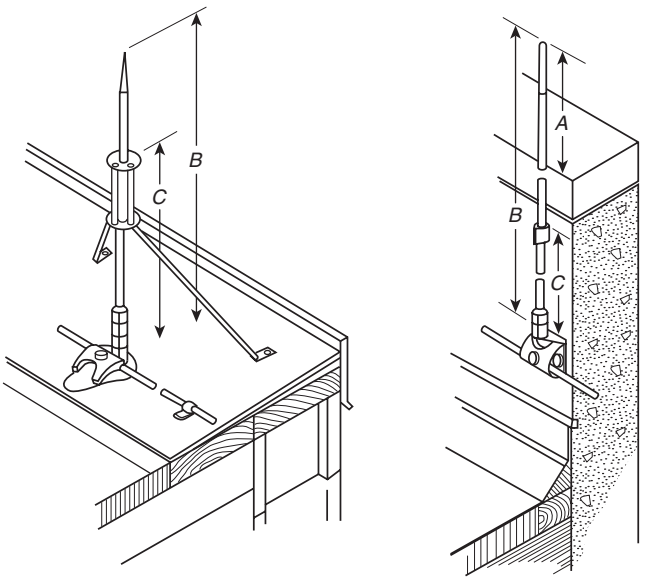

A: 600 mm (24 in.)
B: Air terminals over 600 mm (24 in.) high are supported
C: Air terminal supports are located at a point not less than one-half the height of the air terminal
Note: Air terminal tip configurations can be sharp or blunt.

FIGURE 4.6.3.2 Air Terminal Support.

4.7 Zones of Protection. The geometry of the structure shall determine the zone of protection. One or more methods, as described in 4.7.1 through 4.7.3.4.2, shall be used to determine the overall zone of protection.

4.7.1 Roof Types. The zone of protection for the following roof types shall include the roof and appurtenances where protected in accordance with Section 4.8:

(1) Flat or gently sloping roofs
(2) Dormers
(3) Domed roofs
(4) Roofs with ridges, wells, chimneys, or vents

4.7.2 Multiple-Level Roofs.

4.7.2.1 For structures with multiple-level roofs no more than 15 m (50 ft) in height, the zone of protection shall include areas as identified in 4.7.2.3 and 4.7.2.4.

4.7.2.2 The zone of protection is a cone with the apex located at the highest point of the strike termination device, with its surface formed by a 45-degree or 63-degree angle from the vertical.

4.7.2.3 Structures that do not exceed 7.6 m (25 ft) above earth shall be considered to protect lower portions of a structure located within a one-to-two zone of protection as shown in Figure 4.7.2.3(a) and Figure 4.7.2.3(b).

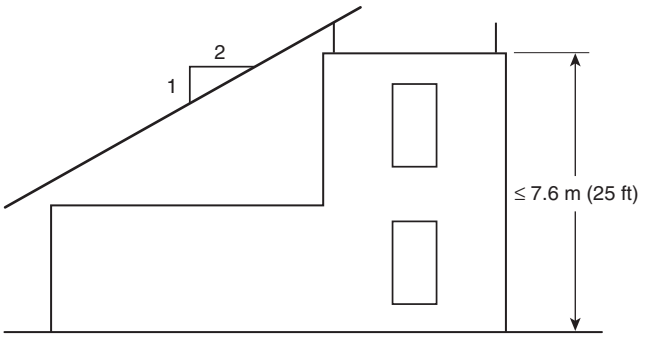

FIGURE 4.7.2.3(a) Lower Roof Protection for Flat Roof Buildings 7.6 m (25 ft) or Less in Height.

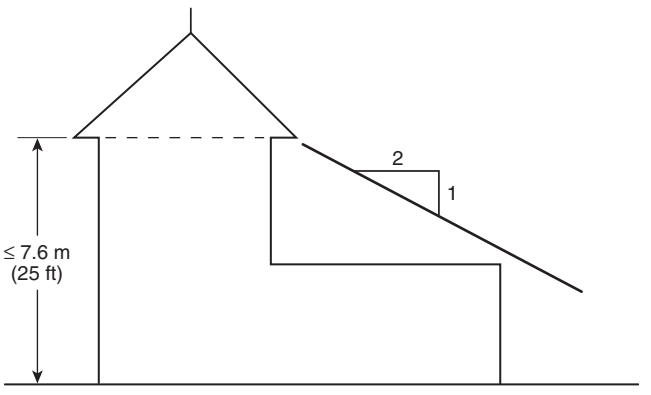

FIGURE 4.7.2.3(b) Lower Roof Protection Provided by Pitched Roof Buildings 7.6 m (25 ft) or Less in Height.

4.7.2.4 Structures that do not exceed 15 m (50 ft) above earth shall be considered to protect lower portions of a structure located within a one-to-one zone of protection as shown in Figure 4.7.2.4(a) and Figure 4.7.2.4(b).

4.7.3 Rolling Sphere Method.

4.7.3.1 The zone of protection shall include the space not intruded by a rolling sphere having a radius of 46 m (150 ft).

Documents Document Sharing Hub
Full document details: NFPA 780 2008

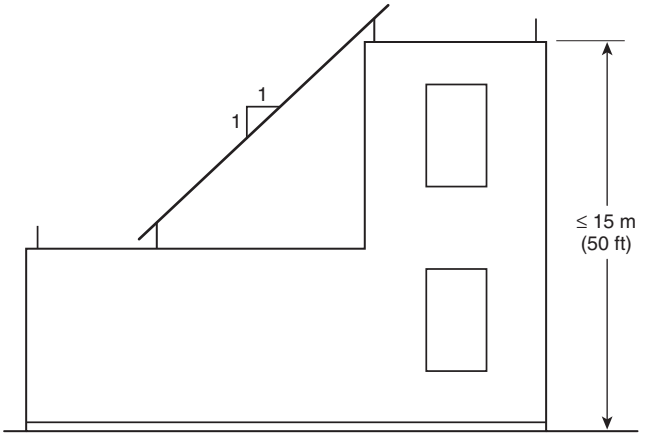

FIGURE 4.7.2.4(a) Lower Roof Protection for Buildings 15 m (50 ft) or Less in Height.

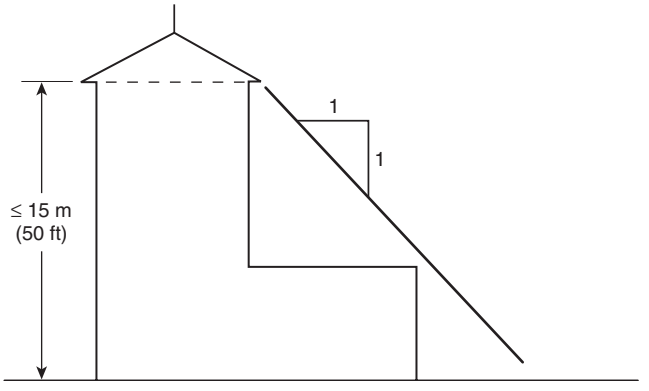

FIGURE 4.7.2.4(b) Lower Roof Protection Provided by Pitched Roof Buildings 15 m (50 ft) or Less in Height.

(A) Where the sphere is tangent to earth and resting against a strike termination device, all space in the vertical plane between the two points of contact and under the sphere shall be considered to be in the zone of protection.

(B) A zone of protection shall also be formed where such a sphere is resting on two or more strike termination devices and shall include the space in the vertical plane under the sphere and between those devices, as shown in Figure 4.7.3.1(B).

(C) All possible placements of the sphere shall be considered when determining the overall zone of protection using the rolling sphere method.

4.7.3.2* For structure heights exceeding 46 m (150 ft) above earth or above a lower strike termination device, the zone of protection shall be the space in the vertical plane between the points of contact, and also under the sphere where the sphere is resting against a vertical surface of the structure and the lower strike termination device(s) or earth.

4.7.3.3 Figure 4.7.3.3 depicts the 46 m (150 ft) rolling sphere method for structures of selected heights up to 46 m (150 ft). Based on the height of the strike termination device for a protected structure being 7.6 m (25 ft), 15 m (50 ft), 23 m (75 ft), 30 m (100 ft), or 46 m (150 ft) above ground, reference to the appropriate curve shows the anticipated zone of protection for objects and roofs at lower elevations.

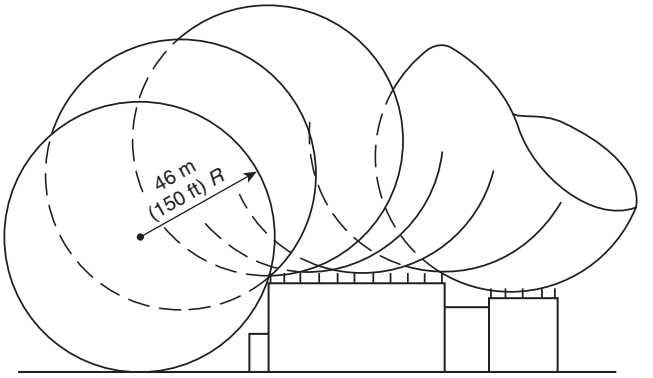

FIGURE 4.7.3.1(B) Zone of Protection Depicting a Rolling Sphere.

(A) The graph shows the protected distance ("horizontal distance") as measured radially from the protected structure.

(B) The horizontal distance thus determined shall apply only at the horizontal plane of the "height protected."

4.7.3.4 Under the rolling sphere method, the horizontal protected distance found geometrically by Figure 4.7.3.3 ("horizontal protected distance, m" or "horizontal protected distance, ft") also shall be permitted to be calculated using the following formula (units shall be consistent, m or ft):

$$d = \sqrt{h_1(2R - h_1)} - \sqrt{h_2(2R - h_2)}$$

where:
d = horizontal protected distance
h_1 = height of the higher roof
R = rolling sphere radius [46 m (150 ft)]
h_2 = height of the lower roof (top of the object)

4.7.3.4.1 Use of this formula shall be based on a 46 m (150 ft) striking distance.

4.7.3.4.2 For the formula to be valid, the sphere shall be either tangent to the lower roof or in contact with the earth, and in contact with the vertical side of the higher portion of the structure.

(A) In addition, the difference in heights between the upper and lower roofs or earth shall be 46 m (150 ft) or less.

4.8 Strike Termination Devices on Roofs.

4.8.1 Pitched Roofs.

(A) Pitched roofs shall be defined as roofs having a span of 12 m (40 ft) or less and a pitch 1/8 or greater, and roofs having a span of more than 12 m (40 ft) and a pitch 1/4 or greater.

(B) All other roofs shall be considered gently sloping and are to be treated as flat.

4.8.2* Location of Devices. As shown in Figure 4.8.2, the distance between strike termination devices and ridge ends on pitched roofs, or edges and outside corners of flat or gently sloping roofs, shall not exceed 0.6 m (2 ft).

Documents
Document Sharing Hub
Full document details: NFPA 780 2008

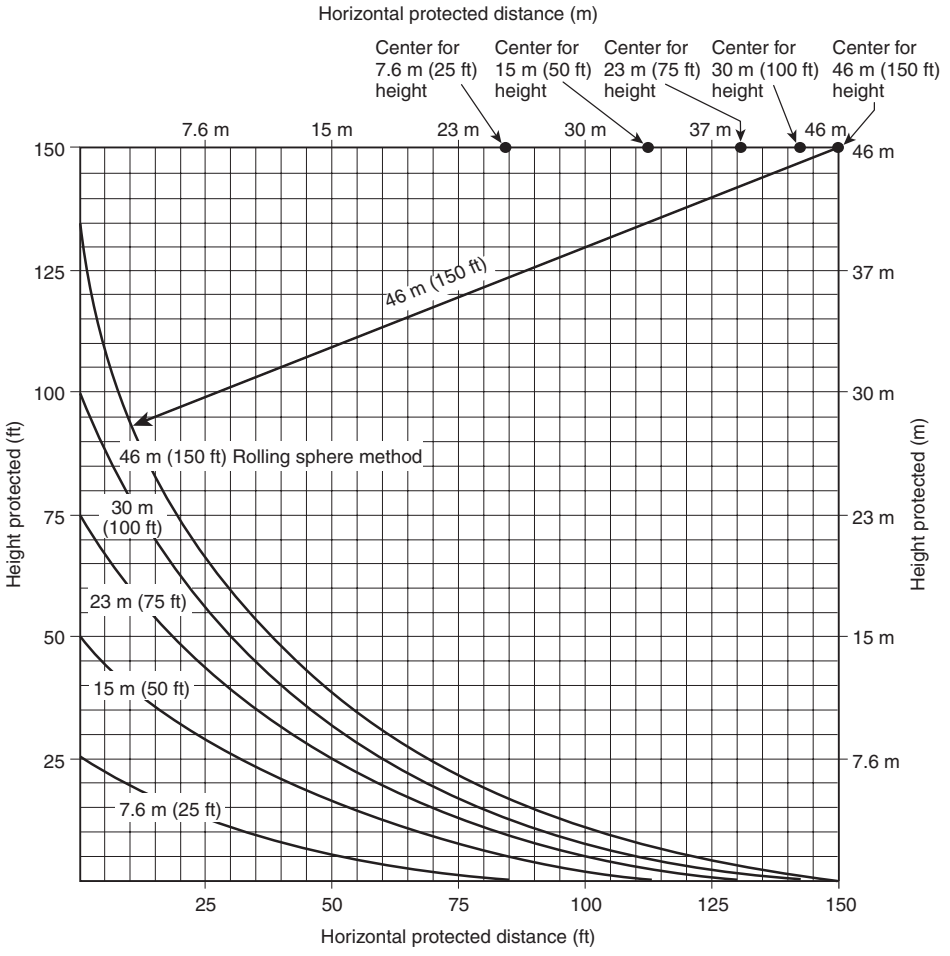

FIGURE 4.7.3.3 Zone of Protection Utilizing Rolling Sphere Method.

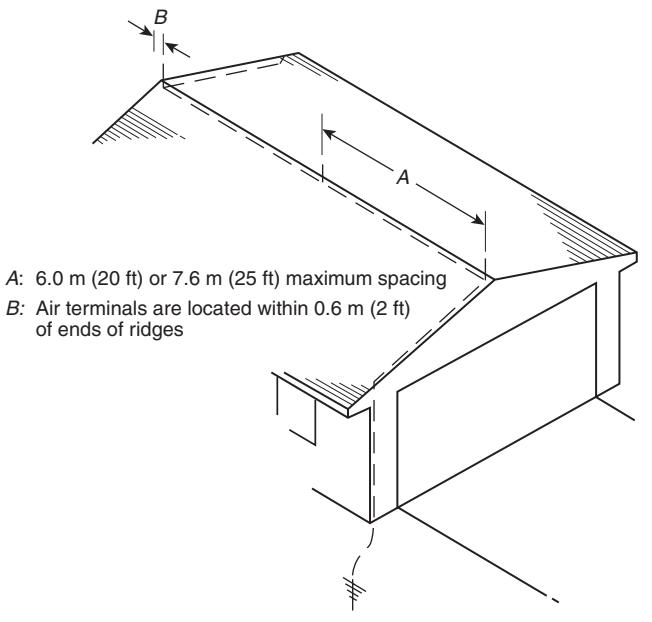

FIGURE 4.8.2 Air Terminals on a Pitched Roof.

4.8.2.1 Strike termination devices shall be placed on ridges of pitched roofs, and around the perimeter of flat or gently sloping roofs, at intervals not exceeding 6 m (20 ft).

4.8.2.2 Strike termination devices 0.6 m (2 ft) or more above the object or area to be protected shall be permitted to be placed at intervals not exceeding 7.6 m (25 ft).

4.8.2.3 Pitched Roof Area.

(A) A pitched roof with eave heights of 15 m (50 ft) or less above grade shall require protection for the ridge only where there is no horizontal portion of the building that extends beyond the eaves, other than a gutter.

(B) Pitched roofs with eave heights more than 15 m (50 ft) shall have strike termination devices located according to the 46 m (150 ft) rolling sphere method. *[See Figure 4.7.3.1(B) and Figure 4.7.3.3.]*

4.8.2.4 Flat or Gently Sloping Roof Area. Flat or gently sloping roofs that exceed 15 m (50 ft) in width or length shall have additional strike termination devices located at intervals not to exceed 15 m (50 ft) on the flat or gently sloping areas, as shown in Figure 4.8.2.4(a) and Figure 4.8.2.4(b), or such area can also be protected using taller air terminals that create zones of protection using the rolling sphere method so the sphere does not contact the flat or gently sloping roof area.

Documents Document Sharing Hub
Full document details: NFPA 780 2008

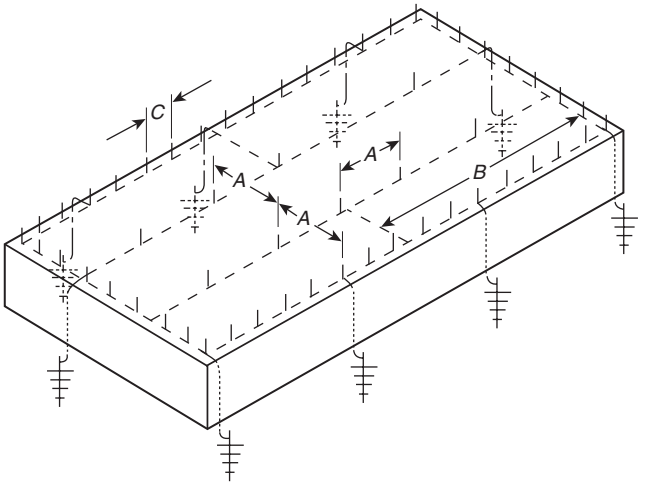

A: 15 m (50 ft) maximum spacing between air terminals
B: 45 m (150 ft) maximum length of cross run conductor permitted without a connection from the cross run conductor to the main perimeter or down conductor
C: 6 m (20 ft) or 7.6 m (25 ft) maximum spacings between air terminals along edge

FIGURE 4.8.2.4(a) Air Terminals on a Flat Roof.

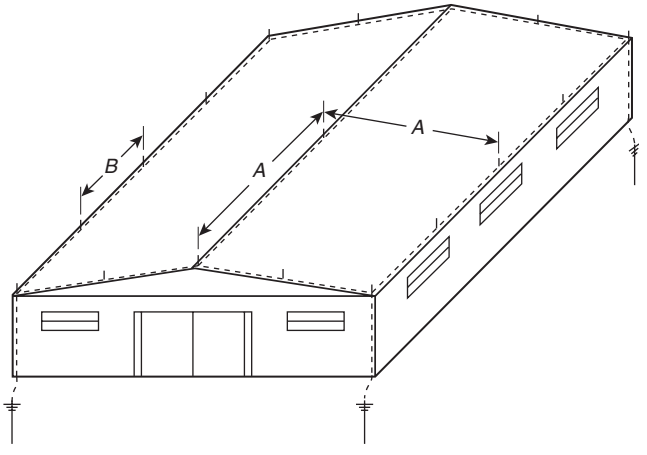

A: 15 m (50 ft) maximum spacing
B: 6 m (20 ft) or 7.6 m (25 ft) maximum spacing

FIGURE 4.8.2.4(b) Air Terminals on a Gently Sloping Roof.

4.8.3* Dormers.

4.8.3.1 Dormers as high as or higher than the main roof ridge shall be protected with strike termination devices, conductors, and grounds, where required.

4.8.3.2 Dormers and projections below the main ridge shall require protection only on those areas extending outside a zone of protection.

4.8.4 Roofs with Intermediate Ridges. Strike termination devices shall be located along the outermost ridges of buildings that have a series of intermediate ridges at the same intervals as required by 4.8.2.

4.8.4.1 Strike termination devices shall be located on the intermediate ridges in accordance with the requirements for the spacing of strike termination devices on flat or gently sloping roofs.

4.8.4.2 If any intermediate ridge is higher than the outermost ridges, it shall be treated as a main ridge and protected according to 4.8.2.

4.8.5 Flat or Gently Sloping Roofs with Irregular Perimeters. Structures that have exterior wall designs that result in irregular roof perimeters shall be treated on an individual basis.

4.8.5.1 The outermost projections form an imaginary roof edge that shall be used to locate the strike termination devices in accordance with 4.8.2.

4.8.5.2 In all cases, however, strike termination devices shall be located in accordance with Section 4.8, as shown in Figure 4.8.5.2.

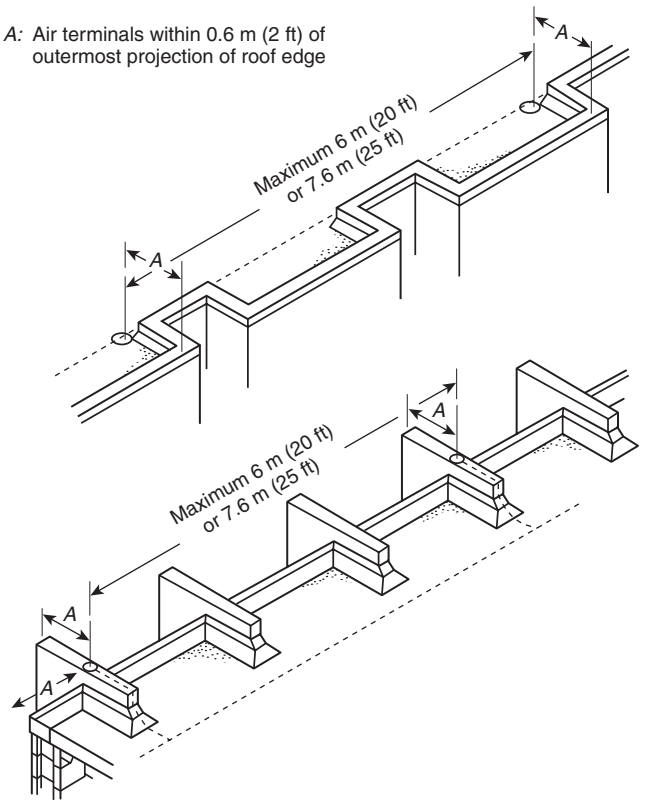

FIGURE 4.8.5.2 Flat or Gently Sloping Roof with an Irregular Perimeter.

4.8.5.3 Strike termination devices installed on vertical roof members shall be permitted to use a single main-size cable to connect to a main roof conductor.

4.8.5.4 The main roof conductor shall be run adjacent to the vertical roof members so that the single cable from the strike termination device is as short as possible and in no case longer than 4.9 m (16 ft).

4.8.5.5 The connection of the single cable to the down conductor shall be made with a tee splice, as shown in Figure 4.8.5.5.

Documents
Document Sharing Hub
Full document details: NFPA 780 2008

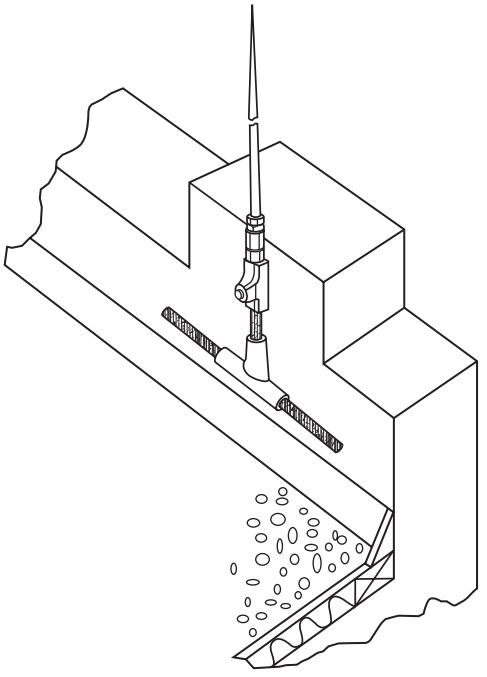

Note: Air terminal tip configurations can be sharp or blunt.

FIGURE 4.8.5.5 Irregular Roof Perimeter.

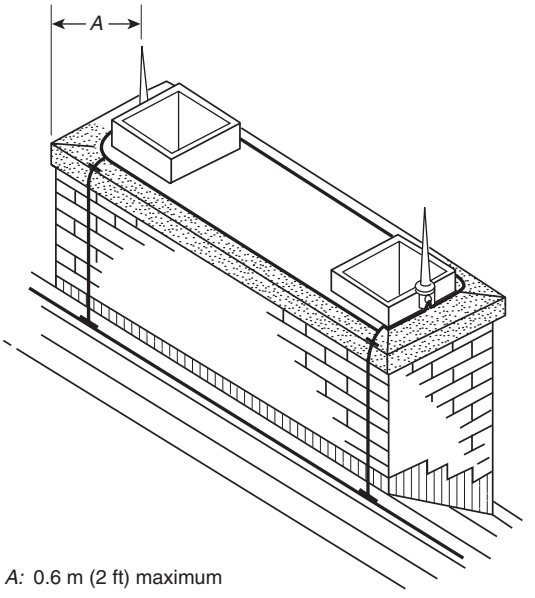

A: 0.6 m (2 ft) maximum

Note: Air terminal tip configurations can be sharp or blunt.

FIGURE 4.8.8.3 Air Terminals on a Chimney.

4.8.6 Open Areas in Flat Roofs. The perimeter of open areas, such as light or mechanical wells, shall be protected if the open area perimeter exceeds 92 m (300 ft), provided both rectangular dimensions exceed 15 m (50 ft).

4.8.7 Domed or Rounded Roofs. Strike termination devices shall be located so that no portion of the structure is located outside a zone of protection, as set forth in Section 4.7.

4.8.8 Chimneys and Vents. Strike termination devices shall be required on all chimneys and vents that are not located within a zone of protection, including metal chimneys having a metal thickness of less than 4.8 mm (3⁄16 in.).

4.8.8.1 Chimneys or vents with a metal thickness of 4.8 mm (3⁄16 in.) or more shall require only a connection to the lightning protection system.

4.8.8.2 The connection for 4.8.8.1 shall be made using a main-size lightning conductor and a bonding device that has a surface contact area of not less than 1940 mm^2 (3 $in.^2$) and shall provide two or more paths to ground, as is required for strike termination devices.

4.8.8.3* Required strike termination devices shall be installed on chimneys and vents, as shown in Figure 4.8.8.3, so that the distance from a strike termination device to an outside corner or the distance perpendicular to an outside edge shall be not greater than 0.6 m (2 ft).

4.8.8.4 Where only one strike termination device is required on a chimney or vent, at least one main-size conductor shall connect the strike termination device to a main conductor at the location where the chimney or vent meets the roof surface and provides two or more paths to ground from that location in accordance with Section 4.9 and 4.9.2.

4.8.9 Metal Roof Top Units. Roof top mechanical units with continuous metal housings less than 4.8 mm (3⁄16 in.) thick such as air-conditioning/heating units, metal air intake/exhaust housings, cooling towers, and so forth, shall be protected by 4.8.9.1 through 4.8.9.2.2.

4.8.9.1 Air terminals shall be installed in accordance with 4.8.1 and 4.8.2.

4.8.9.1.1 These shall be mounted on bases having a minimum contact area of 1940 mm^2 (3 $in.^2$) each secured to bare metal of the housing or mounted by drilling and tapping to the unit's frame per 4.16.3.2 and 4.16.3.3.

4.8.9.2 At least two main-size conductors shall be installed.

4.8.9.2.1 The connection shall be made to bare metal at the base or lower edges of the unit using main-size lightning conductors and bonding devices that have a surface contact area of not less than 1940 mm^2 (3 $in.^2$) and shall provide two or more paths to ground, as is required for strike termination devices.

4.8.9.2.2 These two main bonding plates shall be located as far apart as practicable at the base or lower edges of the unit's electrically continuous metal housing and connected to the lightning protection system.

4.9 Conductors. Main conductors shall interconnect all strike termination devices and shall form two or more paths from each strike termination device downward, horizontally, or rising at no more than 1/4 pitch to connections with grounding electrodes, except as permitted by 4.9.1 and 4.9.2.

4.9.1 One-Way Path. Strike termination devices on a lower roof level that are interconnected by a conductor run from a higher roof level shall require only one horizontal or downward path to ground, provided the lower level roof conductor run does not exceed 12 m (40 ft).

AVA Documents Document Sharing Hub
Full document details: NFPA 780 2008

4.9.2 Dead Ends. Strike termination devices shall be permitted to be "dead ended," as shown in Figure 4.9.2, with only one path to a main conductor on roofs below the main protected level, provided the conductor run from the strike termination device to a main conductor is not more than 4.9 m (16 ft) in total length and maintains a horizontal or downward coursing.

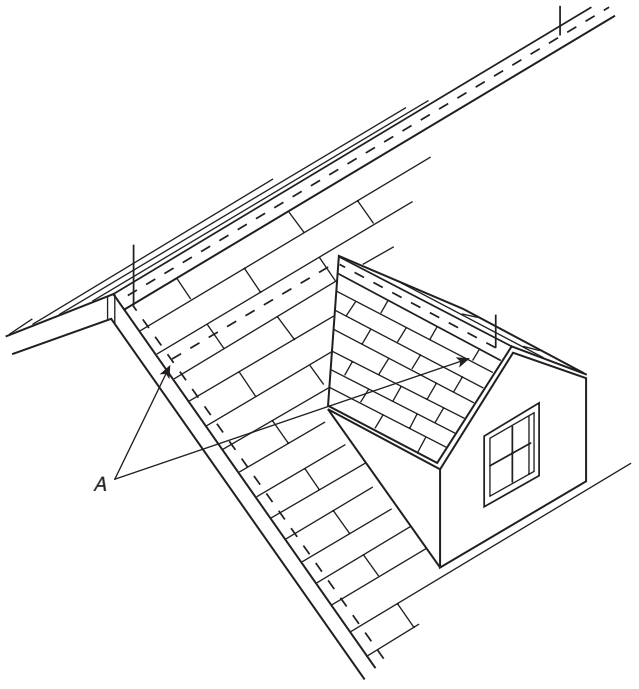

A: Permissible dead-end total conductor length not over 4.9 m (16 ft)

FIGURE 4.9.2 Dead End.

4.9.3 Substitution of Main Conductor.

4.9.3.1 Ancillary metal parts of a structure, such as eave troughs, downspouts, ladders, chutes, or other metal parts except as permitted in 4.16.1, shall not be substituted for the main conductor.

4.9.3.2 Permanent exterior metal handrails and ladders that are subject to direct lightning strikes (e.g., on roofs or between roofs) and are electrically continuous shall be permitted to be used as main conductors where the minimum thickness is 1.63 mm (0.064 in.).

4.9.3.3 Likewise, metal roofing or siding having a thickness of less than 4.8 mm (3⁄16 in.) shall not be substituted for main conductors.

4.9.4 "U" or "V" Pockets.

4.9.4.1 Conductors shall maintain a horizontal or downward coursing free from "U" or "V" (down and up) pockets.

4.9.4.2 Such pockets, often formed at low-positioned chimneys, dormers, or other projections on sloped roofs or at parapet walls, shall be provided with a down conductor from the base of the pocket to ground or to an adjacent downlead conductor, as shown in Figure 4.9.4.2.

4.9.5 Conductor Bends. No bend of a conductor shall form an included angle of less than 90 degrees, nor shall it have a radius of bend less than 203 mm (8 in.), as shown in Figure 4.9.5.

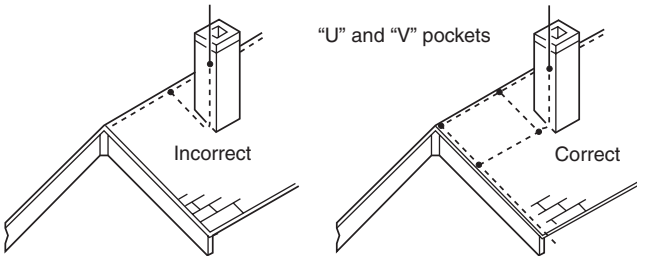

FIGURE 4.9.4.2 Pockets.

4.9.6 Conductor Supports.

4.9.6.1 Conductors shall be permitted to be coursed through air without support for a distance of 0.9 m (3 ft) or less.

4.9.6.2 Conductors that must be coursed through air for distances longer than those of 4.9.6.1 shall be provided with a positive means of support that will prevent damage or displacement of the conductor.

4.9.7 Roof Conductors.

4.9.7.1 Roof conductors shall be coursed along ridges of gable, gambrel, and hip roofs; around the perimeter of flat roofs; behind or on top of parapets; and across flat or gently sloping roof areas as required to interconnect all strike termination devices.

4.9.7.2 Conductors shall be coursed through or around obstructions (e.g., cupolas and ventilators) in a horizontal plane with the main conductor.

4.9.8 Cross-Run Conductors. Cross-run conductors (main conductors) shall be required to interconnect the strike termination devices on flat or gently sloping roofs that exceed 15 m (50 ft) in width.

4.9.8.1 For example, roofs from 15 m to 30 m (50 ft to 100 ft) in width shall require one cross-run conductor, roofs 30 m to 46 m (100 ft to 150 ft) in width shall require two cross-run conductors, and so on.

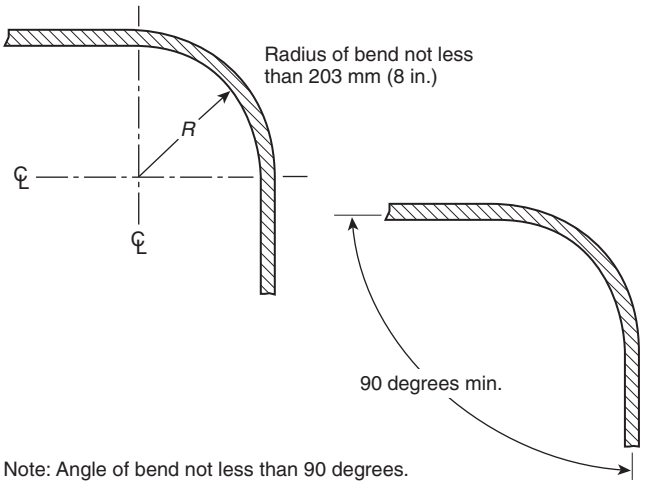

Note: Angle of bend not less than 90 degrees.

FIGURE 4.9.5 Conductor Bends.

Documents
Document Sharing Hub
Full document details: NFPA 780 2008

4.9.8.2 Cross-run conductors shall be connected to the main perimeter cable at intervals not exceeding 46 m (150 ft), as shown in Figure 4.8.2.4(a).

4.9.9 Down Conductors.

4.9.9.1 Down conductors shall be as widely separated as practicable.

4.9.9.2 The location of down conductors shall depend on considerations such as the following:

(1) Placement of strike termination devices
(2) Most direct coursing of conductors
(3) Earth conditions
(4) Security against displacement
(5) Location of large metallic bodies
(6) Location of underground metallic piping systems

4.9.10 Number of Down Conductors. At least two down conductors shall be provided on any kind of structure, including steeples.

4.9.10.1 Structures exceeding 76 m (250 ft) in perimeter shall have a down conductor for every 30 m (100 ft) of perimeter or fraction thereof.

4.9.10.2 The total number of down conductors on structures having flat or gently sloping roofs shall be such that the average distance between all down conductors does not exceed 30 m (100 ft).

4.9.10.3 Irregular-shaped structures shall have additional down conductors as necessary to provide a two-way path from each strike termination device.

4.9.10.4 For a flat or gently sloping roof structure, only the perimeter of the roof areas requiring protection shall be measured.

4.9.10.5 When determining the perimeter of a pitched roof structure, the horizontal projection (footprint) of the protected roof shall be measured as shown in Figure 4.9.10.5.

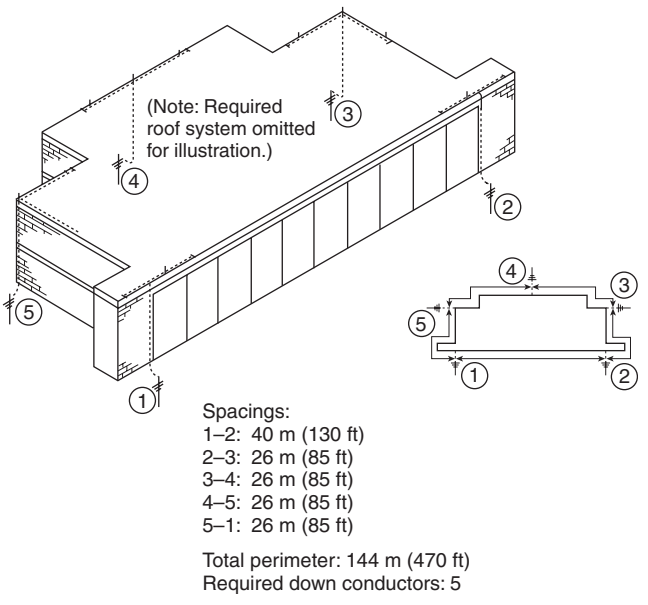

FIGURE 4.9.10.5 Quantity of Down Conductors.

4.9.10.6 Lower roofs or projections that are located within a zone of protection shall not be required to be included in the perimeter measurement.

4.9.11 Protecting Down Conductors. Down conductors located in runways, driveways, school playgrounds, cattle yards, public walks, or other locations subject to physical damage or displacement shall be guarded.

4.9.11.1 Metallic guards shall be bonded at each end.

4.9.11.2 The down conductor shall be protected for a minimum distance of 1.8 m (6 ft) above grade level.

4.9.12 Down Conductors Entering Corrosive Soil. Down conductors entering corrosive soil shall be protected against corrosion by a protective covering beginning at a point 0.9 m (3 ft) above grade level and extending for their entire length below grade.

4.9.13 Down Conductors and Structural Columns. Down conductors coursed on or in reinforced concrete columns or on structural steel columns shall be connected to the reinforcing steel or the structural steel member at their upper and lower extremities.

4.9.13.1 In the case of long vertical members, an additional connection shall be made at intervals not exceeding 60 m (200 ft).

4.9.13.2 The connections for 4.9.13.1 shall be made using listed clamps or listed bonding plates or by welding or brazing.

4.9.13.3 Where the bonding requirements of 4.9.13.1 and 4.9.13.2 are not satisfied, provisions shall be made to ensure the required interconnection of these parallel vertical paths.

4.9.14 Down Conductors in Nonmetallic Enclosures. The use of PVC conduit or other nonmetallic chase shall not eliminate the need to satisfy the bonding requirements of Sections 4.19, 4.20, and 4.21.

4.10 Conductor Fasteners. Conductors shall be fastened to the structure upon which they are placed at intervals not exceeding 0.9 m (3 ft).

4.10.1 Attached by nails, screws, bolts, or adhesives as necessary, the fasteners shall not be subject to breakage and shall be of the same material as the conductor or of a material equally resistant to corrosion as that of the conductor.

4.10.2 No combination of materials shall be used that will form an electrolytic couple of such a nature that, in the presence of moisture, corrosion will be accelerated.

4.11 Masonry Anchors. Masonry anchors used to attach lightning protection materials shall have a minimum outside diameter of 6.4 mm (¼ in.).

4.11.1 Holes made to receive the body of the anchor shall be of the correct size, made in the brick, stone, or other masonry unit rather than in mortar joints.

4.11.2 Where the anchors are installed, the fit shall be tight against moisture, thus reducing the possibility of damage due to freezing.

4.12 Connector Fittings. Connector fittings shall be used at all "end-to-end," "tee," or "Y" splices of lightning conductors.

4.12.1 Fittings shall be attached so as to withstand a pull test of 890 N (200 lb).

AVA Documents Document Sharing Hub
Full document details: NFPA 780 2008