NFPA® 780

Standard for the Installation of Lightning Protection Systems

2023 Edition

NFPA, 1 Batterymarch Park, Quincy, MA 02169-7471
An International Codes and Standards Organization

Documents
Document Sharing Hub
Full document details: NFPA 780 2023

Documents
Document Sharing Hub

Full document details: NFPA 780 2023

IMPORTANT NOTICES AND DISCLAIMERS CONCERNING NFPA® STANDARDS

NFPA® codes, standards, recommended practices, and guides ("NFPA Standards"), of which the document contained herein is one, are developed through a consensus standards development process approved by the American National Standards Institute. This process brings together volunteers representing varied viewpoints and interests to achieve consensus on fire and other safety issues. While the NFPA administers the process and establishes rules to promote fairness in the development of consensus, it does not independently test, evaluate, or verify the accuracy of any information or the soundness of any judgments contained in NFPA Standards.

The NFPA disclaims liability for any personal injury, property, or other damages of any nature whatsoever, whether special, indirect, consequential or compensatory, directly or indirectly resulting from the publication, use of, or reliance on NFPA Standards. The NFPA also makes no guaranty or warranty as to the accuracy or completeness of any information published herein.

In issuing and making NFPA Standards available, the NFPA is not undertaking to render professional or other services for or on behalf of any person or entity. Nor is the NFPA undertaking to perform any duty owed by any person or entity to someone else. Anyone using this document should rely on his or her own independent judgment or, as appropriate, seek the advice of a competent professional in determining the exercise of reasonable care in any given circumstances.

The NFPA has no power, nor does it undertake, to police or enforce compliance with the contents of NFPA Standards. Nor does the NFPA list, certify, test, or inspect products, designs, or installations for compliance with this document. Any certification or other statement of compliance with the requirements of this document shall not be attributable to the NFPA and is solely the responsibility of the certifier or maker of the statement.

REVISION SYMBOLS IDENTIFYING CHANGES FROM THE PREVIOUS EDITION

Text revisions are shaded. A Δ before a section number indicates that words within that section were deleted and a Δ to the left of a table or figure number indicates a revision to an existing table or figure. When a chapter was heavily revised, the entire chapter is marked throughout with the Δ symbol. Where one or more sections were deleted, a • is placed between the remaining sections. Chapters, annexes, sections, figures, and tables that are new are indicated with an *N*.

Note that these indicators are a guide. Rearrangement of sections may not be captured in the markup, but users can view complete revision details in the First and Second Draft Reports located in the archived revision information section of each code at www.nfpa.org/docinfo. Any subsequent changes from the NFPA Technical Meeting, Tentative Interim Amendments, and Errata are also located there.

REMINDER: UPDATING OF NFPA STANDARDS

Users of NFPA codes, standards, recommended practices, and guides ("NFPA Standards") should be aware that these documents may be superseded at any time by the issuance of a new edition, may be amended with the issuance of Tentative Interim Amendments (TIAs), or be corrected by Errata. It is intended that through regular revisions and amendments, participants in the NFPA standards development process consider the then-current and available information on incidents, materials, technologies, innovations, and methods as these develop over time and that NFPA Standards reflect this consideration. Therefore, any previous edition of this document no longer represents the current NFPA Standard on the subject matter addressed. NFPA encourages the use of the most current edition of any NFPA Standard [as it may be amended by TIA(s) or Errata] to take advantage of current experience and understanding. An official NFPA Standard at any point in time consists of the current edition of the document, including any issued TIAs and Errata then in effect.

To determine whether an NFPA Standard has been amended through the issuance of TIAs or corrected by Errata, visit the "Codes & Standards" section at www.nfpa.org.

ISBN: 978-145592924-5 (Print)

AVA Documents
Document Sharing Hub

Full document details: NFPA 780 2023

ADDITIONAL IMPORTANT NOTICES AND DISCLAIMERS CONCERNING NFPA® STANDARDS

Updating of NFPA Standards

Users of NFPA codes, standards, recommended practices, and guides ("NFPA Standards") should be aware that these documents may be superseded at any time by the issuance of a new edition, may be amended with the issuance of Tentative Interim Amendments (TIAs), or be corrected by Errata. It is intended that through regular revisions and amendments, participants in the NFPA standards development process consider the then-current and available information on incidents, materials, technologies, innovations, and methods as these develop over time and that NFPA Standards reflect this consideration. Therefore, any previous edition of this document no longer represents the current NFPA Standard on the subject matter addressed. NFPA encourages the use of the most current edition of any NFPA Standard [as it may be amended by TIA(s) or Errata] to take advantage of current experience and understanding. An official NFPA Standard at any point in time consists of the current edition of the document, including any issued TIAs and Errata then in effect.

To determine whether an NFPA Standard has been amended through the issuance of TIAs or corrected by Errata, visit the "Codes & Standards" section at www.nfpa.org.

Interpretations of NFPA Standards

A statement, written or oral, that is not processed in accordance with Section 6 of the Regulations Governing the Development of NFPA Standards shall not be considered the official position of NFPA or any of its Committees and shall not be considered to be, nor be relied upon as, a Formal Interpretation.

Patents

The NFPA does not take any position with respect to the validity of any patent rights referenced in, related to, or asserted in connection with an NFPA Standard. The users of NFPA Standards bear the sole responsibility for determining the validity of any such patent rights, as well as the risk of infringement of such rights, and the NFPA disclaims liability for the infringement of any patent resulting from the use of or reliance on NFPA Standards.

NFPA adheres to the policy of the American National Standards Institute (ANSI) regarding the inclusion of patents in American National Standards ("the ANSI Patent Policy"), and hereby gives the following notice pursuant to that policy:

NOTICE: The user's attention is called to the possibility that compliance with an NFPA Standard may require use of an invention covered by patent rights. NFPA takes no position as to the validity of any such patent rights or as to whether such patent rights constitute or include essential patent claims under the ANSI Patent Policy. If, in connection with the ANSI Patent Policy, a patent holder has filed a statement of willingness to grant licenses under these rights on reasonable and nondiscriminatory terms and conditions to applicants desiring to obtain such a license, copies of such filed statements can be obtained, on request, from NFPA. For further information, contact the NFPA at the address listed below.

Law and Regulations

Users of NFPA Standards should consult applicable federal, state, and local laws and regulations. NFPA does not, by the publication of its codes, standards, recommended practices, and guides, intend to urge action that is not in compliance with applicable laws, and these documents may not be construed as doing so.

Copyrights

NFPA Standards are copyrighted. They are made available for a wide variety of both public and private uses. These include both use, by reference, in laws and regulations, and use in private self-regulation, standardization, and the promotion of safe practices and methods. By making these documents available for use and adoption by public authorities and private users, the NFPA does not waive any rights in copyright to these documents.

Use of NFPA Standards for regulatory purposes should be accomplished through adoption by reference. The term "adoption by reference" means the citing of title, edition, and publishing information only. Any deletions, additions, and changes desired by the adopting authority should be noted separately in the adopting instrument. In order to assist NFPA in following the uses made of its documents, adopting authorities are requested to notify the NFPA (Attention: Secretary, Standards Council) in writing of such use. For technical assistance and questions concerning adoption of NFPA Standards, contact NFPA at the address below.

For Further Information

All questions or other communications relating to NFPA Standards and all requests for information on NFPA procedures governing its codes and standards development process, including information on the procedures for requesting Formal Interpretations, for proposing Tentative Interim Amendments, and for proposing revisions to NFPA standards during regular revision cycles, should be sent to NFPA headquarters, addressed to the attention of the Secretary, Standards Council, NFPA, 1 Batterymarch Park, P.O. Box 9101, Quincy, MA 02269-9101; email: stds_admin@nfpa.org.

For more information about NFPA, visit the NFPA website at www.nfpa.org. All NFPA codes and standards can be viewed at no cost at www.nfpa.org/docinfo.

AVA Documents
Document Sharing Hub

Full document details: NFPA 780 2023

Copyright © 2022 National Fire Protection Association®. All Rights Reserved.

NFPA® 780

Standard for the

Installation of Lightning Protection Systems

2023 Edition

This edition of NFPA 780, *Standard for the Installation of Lightning Protection Systems*, was prepared by the Technical Committee on Lightning Protection. It was issued by the Standards Council on March 20, 2022, with an effective date of April 9, 2022, and supersedes all previous editions.

This edition of NFPA 780 was approved as an American National Standard on April 9, 2022.

Origin and Development of NFPA 780

NFPA first adopted *Specifications for Protection of Buildings Against Lightning* in 1904. Revised standards were adopted in 1905, 1906, 1925, 1932, and 1937. In 1945, the NFPA Committee and the parallel American Standards Association (ASA) Committee on Protection Against Lightning were reorganized and combined under the sponsorship of NFPA, the National Bureau of Standards, and the American Institute of Electrical Engineers (now the IEEE). In 1946, NFPA acted to adopt Part III and in 1947 published a revised edition incorporating this part. Further revisions recommended by the Committee were adopted by NFPA in 1949, 1950, 1951, 1952, 1957, 1959, 1963, 1965, 1968, 1975, 1977, 1980, 1983, 1986, 1989, and 1992.

Commencing with the 1992 edition of the *Lightning Protection Code*, the NFPA numerical designation of the document was changed from NFPA 78 to NFPA 780.

With the issuance of the 1995 edition, the name of the document was changed from *Lightning Protection Code* to *Standard for the Installation of Lightning Protection Systems*. This change was directed by the Standards Council to make the title more accurately reflect the document's content. In addition, the council directed certain changes to the scope of the document to clarify that the document did not cover lightning protection installation requirements for early streamer emission systems or lightning dissipater array systems.

The 1997 edition of NFPA 780 incorporated editorial changes to make the document more user friendly.

In issuing this document, the Standards Council noted that lightning is a stochastic, if not capricious, natural process. Its behavior is not yet completely understood. This standard is intended to provide requirements, within the limits of the current state of knowledge, for the installation of those lightning protection systems covered by the standard.

The 2000 edition was amended to provide requirements for open structures such as those found on golf courses. A 1998 lightning flash density chart replaced the 1972 lightning frequency isokeraunic chart.

The 2004 edition reflected an extensive editorial revision of the standard to comply with the *Manual of Style for NFPA Technical Committee Documents*.

Technical revisions throughout the standard included: a solid strip, main conductor was added for Class II material requirements; handrails could be used as a substitute for down conductors; additional separation was required between multiple ground rods; additional guidance was provided when installing a grounding conductor directly on bedrock; surge suppression requirements were rewritten; and titanium strike termination devices were permitted.

The 2008 edition included requirements for surge protective devices.

The definition for *lightning protection system* was revised to include *conductive structural members*. Clarification was provided to prohibit the use of ancillary metal parts as a substitute for the main conductor.

NFPA and National Fire Protection Association are registered trademarks of the National Fire Protection Association, Quincy, Massachusetts 02169.

AVA Documents Document Sharing Hub

Full document details: NFPA 780 2023

Significant changes were made to the requirements for the use of bimetallic clamps and aluminum in proximity to earth. Changes were made to better address grounding electrodes in shallow topsoil applications.

The requirements for the use of multiple ground rods were revised. Requirements were added to address proper installation of lightning protection equipment on large roof-top mechanical units. Revisions enhanced and clarified the requirements for bonding all grounded media and underground metallic piping. Guidance was provided on the use of isolating spark gaps.

Requirements for conductors and other lightning protection system hardware used near the top of a heavy-duty stack were revised. The 2008 edition also included a complete rewrite of Chapter 8, more information in Annex B, and a revision of Annex F.

The 2011 edition included the addition of two new chapters and a major change in the scope of the document. The first new chapter addressed the protection of structures housing ammunition and explosive materials. The second new chapter included requirements for providing lightning protection for wind turbines. The standard was substantially reorganized to accommodate these new chapters in a logical order.

The sections pertaining to strike termination devices, zones of protection, and the rolling sphere method were reorganized for better usability. The text qualified where a metal mast would be permitted to serve as the down conductor. The requirements for overhead ground wires and masts and overhead ground wires were relocated.

The 2011 edition clarified the requirements for strike termination devices at the eaves for a pitched roof, and a figure was added to graphically illustrate that condition. A new section on roof-top helipads provided requirements to ensure that an adequate level of protection is provided to those areas.

The Chapter 7 section on floating roof tanks was revised as a result of recent testing and research conducted for aboveground storage tanks.

The lightning risk assessment methodology provided in Annex L was completely rewritten. This annex provided both a simplified, quick-look assessment and a more detailed assessment for those requiring a more detailed analysis.

The 2014 edition reorganized Sections 4.7 and 4.8 to better align and clarify the requirements for strike termination devices. Section 4.8 was revised to clarify the requirements for protection where small objects are located on roofs. Section 4.14 was revised and reorganized to include parts of Section 4.20, and explanatory text was provided to ensure clarity, alignment, and coordination with the bonding interconnections of *NFPA 70®*, *National Electrical Code®*. Sections 4.15 through 4.21 were restructured and revised to place similar bonding requirements together to improve the flow of the document.

New subsection 4.7.13 addressed the use on buildings of fixed metal objects that have movable or rotating metal components.

Chapter 11 was added to provide lightning protection requirements and guidance for airfield lighting circuits, and to align with federal aviation requirements. Several figures were included that provided ample explanation and guidance to the user.

A new Chapter 12 addressed lightning protection systems for solar systems and arrays.

The requirements pertaining to catenary systems were reviewed, and significant annex material was provided to clarify computations for applications with metal or wood poles.

For the 2017 edition, requirements were added relative to physical on-site inspection of the completed installation and for periodic inspections or testing for compliance. New definitions included: *ground loop conductor*, *integral lightning protection system*, *mast-type lightning protection system*, *rated impulse withstand voltage level (withstand voltage)* (U_W), *smart structure*, *solar array*, and *solar panel*.

Several figures illustrating air terminal protection for lower roof protection were updated. New requirements were established for test and connection points for concrete-encased electrodes to enable periodic maintenance and testing of the ground system. Zero property line conditions were re-evaluated and revised. Bonding requirements were added for long horizontal metal bodies on roofs. Many requirements pertaining to ungrounded metal bodies were revised and the term *isolated (ungrounded)* was deleted for consistency. Chapter 7 was rewritten. Sections in Chapter 8 pertaining to single or multiple masts, railroad tracks, installation of air terminals on earth-covered magazines, wharves, and piers for explosives operations and cranes were revised. Chapter 12 was revised to provide more specific criteria.

Annex J and Annex K were added to the 2017 edition. Annex L was revised to provide greater clarity and correlation of requirements with other lightning protection standards.

For the 2020 edition, revisions in Section 4.9 clarified general requirements for main conductors with emphasis on one-way paths, dead ends, and when upward conductor paths are permitted. Chapter 7 acknowledged lightning electromagnetic pulse (LEMP) as a source of ignition in classified locations. Revisions in Chapter 11 clarified the application of the requirements for lightning protection at airfields. A new Annex N provided guidance on lightning protection of nonmetallic tanks containing

Documents
Document Sharing Hub

Full document details: NFPA 780 2023

combustible or flammable materials. Further study and public input regarding protection of these tanks was deemed necessary before requirements can be added to the body of the standard.

The 2023 edition has added requirements for lightning protection for additions to a protected structure. The definitions for *surge protective device*, *surge arrestor*, and *surge protector* have been revised, and the use of the proper terms corrected throughout the standard. Prescriptive and performance criteria have been added for each surge protective device. Definitions for various connectors have been added to clarify the proper application of NFPA 780 connector requirements. Requirements for protecting tank batteries have also been added.

Documents
2023 Edition
Document Sharing Hub

Full document details: NFPA 780 2023

Technical Committee on Lightning Protection

Christine T. Porter, *Chair*
Intertek Testing Services, WA [RT]
Rep. Intertek Testing Services

Daniel Ashton, Lumen Technologies, Inc. /Centurylink, TX [U]
Samuel Barrack, Consolidated Nuclear Security, LLC, TN [U]
Christopher Batchelor, US Department of the Navy, MD [E]
Matthew Caie, nVent/Pentair/ERICO, Inc., OH [M]
Joanie A. Campbell, US Department of the Air Force, FL [E]
Josephine Covino, US Department of Defense, VA [E]
Kenneth Lee Friend, Jasper Thompson Lightning Protection, Inc., FL [IM]
David A. Gerstetter, UL LLC, IL [RT]
Chuck Graves, US Federal Aviation Administration, OK [E]
Mitchell Guthrie, Engineering Consultant, NC [SE]
Mark S. Harger, Harger Lightning & Grounding, IL [M]
Timothy R. Harger, Lightning Protection Institute, IL [IM]
Rep. Lightning Protection Institute
William E. Heary, Heary Brothers Lightning Protection, NY [IM]
Joshua Hoffman, Institute of Makers of Explosives (IME), DC [U]
Bryan P. Holland, National Electrical Manufacturers Association (NEMA), FL [M]
Rep. National Electrical Manufacturers Association
Stephen Humeniuk, Warren Lightning Rod Company, NJ [IM]
Rep. United Lightning Protection Association, Inc.
Carl S. Johnson, II, AVCON, Inc., FL [U]
Bruce A. Kaiser, Lightning Master Corporation, FL [M]
Simon C. Larter, Dobbyn Lightning Protection, Canada [IM]
David E. McAfee, Lightning & Fire Protection Consultant, MI [SE]
Robley B. Melton, Jr., CSI Telecommunications, GA [U]
Rep. Alliance for Telecommunications Industry Solutions
Mark P. Morgan, East Coast Lightning Equipment, Inc., CT [M]
Luke Pettross, Lightning Eliminators & Consultants Inc., CO [M]
Robert W. Rapp, National Lightning Protection Corporation, CO [M]
Lon D. Santis, Explosives Risk Managers, LLC, MD [SE]
Ewen Thomson, Marine Lightning Protection Inc., FL [SE]
John M. Tobias, US Department of the Army, MD [U]

Alternates

Luis M. Bas, Intertek Testing Services, FL [RT]
(Alt. to Christine T. Porter)
Eric S. Boettcher, UL LLC, FL [RT]
(Alt. to David A. Gerstetter)
Ernest J. Gallo, Telcordia Technologies (Ericsson), NJ [U]
(Alt. to Robley B. Melton, Jr.)
Kenneth P. Heary, Heary Brothers Lightning Protection, NY [IM]
(Alt. to William E. Heary)
Morris Kline, Lightning Master Corporation, FL [M]
(Alt. to Bruce A. Kaiser)
Joseph A. Lanzoni, Lightning Eliminators & Consultants Inc., CO [M]
(Alt. to Luke Pettross)
Andrew S. McElroy, Harger Lightning & Grounding, IL [M]
(Alt. to Mark S. Harger)
Jennifer Morgan, East Coast Lightning Equipment, CT [M]
(Alt. to Mark P. Morgan)
George Portfleet, Michigan Lightning Protection, MI [IM]
(Alt. to Stephen Humeniuk)
Andrew Ritosa, nVent/Pentair/ERICO, Inc., OH [M]
(Alt. to Matthew Caie)
Allan P. Steffes, Thompson Lightning Protection Inc., MN [M]
(Voting Alt.)
Paul R. Svendsen, National Lightning Protection Corporation, CO [M]
(Alt. to Robert W. Rapp)
Leah Tietjen, Los Alamos National Laboratory, NM [U]
(Voting Alt.)

Christopher Coache, NFPA Staff Liaison

This list represents the membership at the time the Committee was balloted on the final text of this edition. Since that time, changes in the membership may have occurred. A key to classifications is found at the back of the document.

NOTE: Membership on a committee shall not in and of itself constitute an endorsement of the Association or any document developed by the committee on which the member serves.

Committee Scope: This Committee shall have primary responsibility for documents on the protection from lightning of buildings and structures, recreation and sports areas, and any other situations involving danger from lightning to people or property, except those concepts utilizing early streamer emission air terminals. The protection of electric generating, transmission, and distribution systems is not within the scope of this Committee.

Documents
Document Sharing Hub
Full document details: NFPA 780 2023

Contents

Chapter 1 Administration **780–** 7
1.1 Scope. **780–** 7
1.2 Purpose. **780–** 7
1.3 Listed, Labeled, or Approved Components. **780–** 7
1.4 Retroactivity. **780–** 7
1.5 Mechanical Execution of Work. **780–** 7
1.6 Maintenance. **780–** 7
1.7 Periodic Inspection. **780–** 7
1.8 Units of Measurement. **780–** 7

Chapter 2 Referenced Publications **780–** 8
2.1 General. **780–** 8
2.2 NFPA Publications. **780–** 8
2.3 Other Publications. **780–** 8
2.4 References for Extracts in Mandatory Sections. **780–** 8

Chapter 3 Definitions **780–** 8
3.1 General. **780–** 8
3.2 NFPA Official Definitions. **780–** 8
3.3 General Definitions. **780–** 8

Chapter 4 General Requirements **780–** 10
4.1 General. **780–** 10
4.2 Materials. **780–** 11
4.3 Corrosion Protection. **780–** 12
4.4 Mechanical Damage or Displacement. **780–** 12
4.5 Strike Termination Devices. **780–** 12
4.6 Strike Termination Devices on Roofs. **780–** 13
4.7 Zones of Protection. **780–** 18
4.8 Conductors. **780–** 20
4.9 Conductor Fasteners. **780–** 22
4.10 Masonry Anchors. **780–** 22
4.11 Connectors. **780–** 22
4.12 Grounding Electrodes. **780–** 22
4.13 Common Bonding of Grounded Systems. **780–** 24
4.14 Potential Equalization. **780–** 25
4.15 Bonding of Metal Bodies. **780–** 25
4.16 Metal Antenna Masts and Supports. **780–** 26
4.17 Concealed Systems. **780–** 26
4.18 Structural Metallic Systems. **780–** 27
4.19 Surge Protection. **780–** 27

Chapter 5 Protection for Miscellaneous Structures and Special Occupancies **780–** 29
5.1 General. **780–** 29
5.2 Masts, Spires, Flagpoles. **780–** 29
5.3 Facilities That Handle or Process Combustible or Explosive Dust. **780–** 29
5.4 Metal Towers and Tanks. **780–** 29
5.5 Air-Inflated Structures. **780–** 29
5.6 Concrete Tanks and Silos. **780–** 29
5.7 Guyed Structures. **780–** 30
5.8 Rooftop Helipads. **780–** 30
5.9 Fabric Structures. **780–** 30

Chapter 6 Protection for Heavy-Duty Stacks **780–** 30
6.1 General. **780–** 30
6.2 Materials. **780–** 30
6.3 Strike Termination Devices. **780–** 30
6.4 Conductors. **780–** 31
6.5 Fasteners. **780–** 31
6.6 Splices. **780–** 31
6.7 Reinforced Concrete Stacks. **780–** 32
6.8 Bonding of Metal Bodies. **780–** 32
6.9 Grounding. **780–** 32
6.10 Metal Stacks. **780–** 32
6.11 Metal Guy Wires and Cables. **780–** 32

Chapter 7 Protection for Structures Containing Flammable Vapors, Flammable Gases, or Liquids That Can Give Off Flammable Vapors **780–** 32
7.1 Applicability. **780–** 32
7.2 Principles of Protection. **780–** 32
7.3 Protective Measures. **780–** 33
7.4 Operating Facilities (Non-Storage Applications). **780–** 33
7.5 Storage Tanks Under Pressure. **780–** 33
7.6 Aboveground Tanks at Atmospheric Pressure. .. **780–** 33
7.7 Earthen Containers at Atmospheric Pressure Containing Flammable Vapors or Liquids That Give Off Flammable Vapors. **780–** 34
7.8 Tank Batteries. **780–** 34

Chapter 8 Protection of Structures Housing Explosive Materials **780–** 35
8.1 Application. **780–** 35
8.2 General. **780–** 35
8.3 Types of Lightning Protection. **780–** 35
8.4 Grounding. **780–** 35
8.5 Bonding. **780–** 36
8.6 Surge Protection. **780–** 36
8.7 Protection for Specific Facilities. **780–** 37
8.8 Metallic Fences. **780–** 38
8.9 Maintenance and Inspection Plan. **780–** 38
8.10 Inspection, Testing, and Maintenance. **780–** 38

Chapter 9 Protection for Wind Turbines **780–** 39
9.1 General. **780–** 39
9.2 Fundamental Principles of Protection. **780–** 39
9.3 Protection of Electrical and Mechanical Control Systems. **780–** 39
9.4 Grounding. **780–** 39

Chapter 10 Protection for Watercraft **780–** 39
10.1 General. **780–** 39
10.2 Materials. **780–** 39
10.3 Strike Termination. **780–** 40
10.4 Conductors. **780–** 40
10.5 Grounding. **780–** 42

Chapter 11 Protection for Airfield Lighting Circuits ... **780–** 43
11.1 General. **780–** 43
11.2 Application. **780–** 43
11.3 Purpose. **780–** 43
11.4 Airfield Lighting Counterpoise System. **780–** 43

Chapter 12 Protection for Solar Arrays **780–** 46
12.1 General. **780–** 46
12.2 Fundamental Principles of Protection. **780–** 46
12.3 Strike Termination Devices. **780–** 46
12.4 Protection of Electrical and Mechanical Systems. **780–** 47
12.5 Grounding. **780–** 48

Annex A Explanatory Material **780–** 48

Annex B Principles of Lightning Protection **780–** 70

Annex C Explanation of Bonding Principles **780–** 73

Annex D Inspection and Maintenance of Lightning Protection Systems **780–** 75

AVA Documents 2023 Edition Document Sharing Hub

Full document details: NFPA 780 2023

Annex E **Ground Measurement Techniques** **780–** 76

Annex F **Protection for Trees** **780–** 77

Annex G **Protection for Picnic Grounds, Playgrounds, Ball Parks, and Other Open Places** **780–** 78

Annex H **Protection for Livestock in Fields** **780–** 79

Annex I **Protection for Parked Aircraft** **780–** 79

Annex J **Protection of Smart Structures** **780–** 80

Annex K **Guide to International Standards Dealing with the Selection of SPDs for Use on Photovoltaic (PV) Installations** **780–** 85

Annex L **Lightning Risk Assessment** **780–** 86

Annex M **Guide for Personal Safety from Lightning** **780–** 101

Annex N **Considerations for Nonmetallic Tanks Containing Flammable Vapors or Liquids that Give Off Flammable Vapors** **780–** 102

Annex O **Informational References** **780–** 103

Index **780–** 106

Documents
Document Sharing Hub

Full document details: NFPA 780 2023

NFPA 780

Standard for the

Installation of Lightning Protection Systems

2023 Edition

IMPORTANT NOTE: This NFPA document is made available for use subject to important notices and legal disclaimers. These notices and disclaimers appear in all publications containing this document and may be found under the heading "Important Notices and Disclaimers Concerning NFPA Standards." They can also be viewed at www.nfpa.org/disclaimers or obtained on request from NFPA.

UPDATES, ALERTS, AND FUTURE EDITIONS: New editions of NFPA codes, standards, recommended practices, and guides (i.e., NFPA Standards) are released on scheduled revision cycles. This edition may be superseded by a later one, or it may be amended outside of its scheduled revision cycle through the issuance of Tentative Interim Amendments (TIAs). An official NFPA Standard at any point in time consists of the current edition of the document, together with all TIAs and Errata in effect. To verify that this document is the current edition or to determine if it has been amended by TIAs or Errata, please consult the National Fire Codes® Subscription Service or the "List of NFPA Codes & Standards" at www.nfpa.org/docinfo. In addition to TIAs and Errata, the document information pages also include the option to sign up for alerts for individual documents and to be involved in the development of the next edition.

NOTICE: An asterisk (*) following the number or letter designating a paragraph indicates that explanatory material on the paragraph can be found in Annex A.

A reference in brackets [ ] following a section or paragraph indicates material that has been extracted from another NFPA document. Extracted text may be edited for consistency and style and may include the revision of internal paragraph references and other references as appropriate. Requests for interpretations or revisions of extracted text shall be sent to the technical committee responsible for the source document.

Information on referenced and extracted publications can be found in Chapter 2 and Annex O.

Chapter 1 Administration

1.1 Scope.

1.1.1 This document shall cover traditional lightning protection system installation requirements for the following:

(1) Ordinary structures
(2) Miscellaneous structures and special occupancies
(3) Heavy-duty stacks
(4) Structures containing flammable vapors, flammable gases, or liquids that can give off flammable vapors
(5) Structures housing explosive materials
(6) Wind turbines
(7) Watercraft
(8) Airfield lighting circuits
(9) Solar arrays

1.1.2* This document shall address lightning protection of the structure but not the equipment or installation requirements for electric generating, transmission, and distribution systems except as given in Chapter 9 and Chapter 12.

1.1.3 This document shall not cover lightning protection system installation requirements for early streamer emission systems or charge dissipation systems.

1.2* Purpose. The purpose of this standard shall be to provide for the safeguarding of persons and property from hazards arising from exposure to lightning.

1.3 Listed, Labeled, or Approved Components.

1.3.1 Where fittings, connectors, devices, lightning conductors, air terminals, or other components required by this standard are available as listed or labeled, such components shall be used.

1.3.2 Listed or labeled equipment shall be installed and used in accordance with any limitations and instructions included in the listing or labeling.

1.4 Retroactivity. The provisions of this standard reflect a consensus of what is necessary to provide an acceptable degree of protection from the hazards addressed in this standard at the time the standard was issued.

1.4.1 Unless otherwise specified, the provisions of this standard shall not apply to facilities, equipment, structures, or installations that existed or were approved for construction or installation prior to the effective date of the standard. Where specified in this standard, the provisions of this standard shall be retroactive.

1.4.2 In those cases where the authority having jurisdiction determines that the existing situation presents an unacceptable degree of risk, the authority having jurisdiction shall be permitted to apply retroactively any portions of this standard deemed appropriate.

1.4.3 The retroactive requirements of this standard shall be permitted to be modified if their application clearly would be impractical in the judgment of the authority having jurisdiction, and only where it is clearly evident that a reasonable degree of safety is provided.

1.5 Mechanical Execution of Work.

1.5.1 Lightning protection systems shall be installed in a neat and workmanlike manner.

1.5.2* The individual(s) responsible for the installation shall be certified for fitness on the requirements of this standard by the authority having jurisdiction.

1.5.3 Where required by the authority having jurisdiction, compliance of the completed installation with the requirements of this standard shall be certified through a physical on-site inspection by a qualified and impartial organization acceptable to the authority having jurisdiction.

1.6* Maintenance. Recommended guidelines for the maintenance of the lightning protection system shall be provided to the owner at the completion of installation.

1.7 Periodic Inspection. Periodic inspections or testing for compliance to this standard shall be done at intervals determined by the authority having jurisdiction.

Δ 1.8 Units of Measurement.

1.8.1 The values stated shall be a minimum requirement, and standard deviations are not permitted.

Documents 2023 Edition Document Sharing Hub
Full document details: NFPA 780 2023

1.8.2 Measurements shall be presented in inch-pound units followed by the equivalent value presented in SI units in parentheses.

1.8.3 A given equivalent value shall be approximate.

Chapter 2 Referenced Publications

2.1 General. The documents or portions thereof listed in this chapter are referenced within this standard and shall be considered part of the requirements of this document.

2.2 NFPA Publications. National Fire Protection Association, 1 Batterymarch Park, Quincy, MA 02169-7471.

NFPA 61, *Standard for the Prevention of Fires and Dust Explosions in Agricultural and Food Processing Facilities,* 2020 edition.

NFPA 70®, National Electrical Code®, 2023 edition.

NFPA 122, *Standard for Fire Prevention and Control in Metal/Nonmetal Mining and Metal Mineral Processing Facilities,* 2020 edition.

NFPA 664, *Standard for the Prevention of Fires and Explosions in Wood Processing and Woodworking Facilities,* 2020 edition.

2.3 Other Publications.

2.3.1 Other Publications.

Merriam-Webster's Collegiate Dictionary, 11th edition, Merriam-Webster, Inc., Springfield, MA, 2003.

•

2.4 References for Extracts in Mandatory Sections.

NFPA 70®, National Electrical Code®, 2023 edition.

NFPA 115, *Standard for Laser Fire Protection,* 2020 edition.

Chapter 3 Definitions

3.1 General. The definitions contained in this chapter shall apply to the terms used in this standard. Where terms are not defined in this chapter or within another chapter, they shall be defined using their ordinarily accepted meanings within the context in which they are used. *Merriam-Webster's Collegiate Dictionary,* 11th edition, shall be the source for the ordinarily accepted meaning.

Δ **3.2 NFPA Official Definitions.**

3.2.1* Approved. Acceptable to the authority having jurisdiction.

3.2.2* Authority Having Jurisdiction (AHJ). An organization, office, or individual responsible for enforcing the requirements of a code or standard, or for approving equipment, materials, an installation, or a procedure.

3.2.3 Labeled. Equipment or materials to which has been attached a label, symbol, or other identifying mark of an organization that is acceptable to the authority having jurisdiction and concerned with product evaluation, that maintains periodic inspection of production of labeled equipment or materials, and by whose labeling the manufacturer indicates compliance with appropriate standards or performance in a specified manner.

3.2.4* Listed. Equipment, materials, or services included in a list published by an organization that is acceptable to the authority having jurisdiction and concerned with evaluation of products or services, that maintains periodic inspection of production of listed equipment or materials or periodic evaluation of services, and whose listing states that either the equipment, material, or service meets appropriate designated standards or has been tested and found suitable for a specified purpose.

3.2.5 Shall. Indicates a mandatory requirement.

3.2.6 Should. Indicates a recommendation or that which is advised but not required.

3.2.7 Standard. An NFPA Standard, the main text of which contains only mandatory provisions using the word "shall" to indicate requirements and that is in a form generally suitable for mandatory reference by another standard or code or for adoption into law. Nonmandatory provisions are not to be considered a part of the requirements of a standard and shall be located in an appendix, annex, footnote, informational note, or other means as permitted in the NFPA Manuals of Style. When used in a generic sense, such as in the phrase "standards development process" or "standards development activities," the term "standards" includes all NFPA Standards, including Codes, Standards, Recommended Practices, and Guides.

3.3 General Definitions.

Δ **3.3.1* Air Terminal.** A manufactured strike termination device intended to provide an intentional attachment point for flashes to the lightning protection system.

3.3.2* Bonded, Inherently. Bonding between metal bodies, building framework, and lightning protection system components that are joined through construction.

3.3.3 Bonding. An electrical connection between an electrically conductive object and a component of a lightning protection system that is intended to significantly reduce potential differences created by lightning currents.

3.3.4* Cable. A conductor formed of a number of wires stranded together.

3.3.5 Catenary Lightning Protection System. A lightning protection system consisting of one or more overhead ground wires.

3.3.6 Chimney. A construction containing one or more flues that does not meet the criteria defined for heavy-duty stack.

3.3.7* Combination Waveform Generator. A surge generator with a 2-ohm internal impedance producing a 1.2/50 μs open circuit voltage and an 8/20 μs short-circuit current waveshape.

3.3.8 Conductor.

3.3.8.1 ***Bonding Conductor.*** A conductor used for potential equalization between grounded metal bodies or electrically conductive objects and a lightning protection system.

3.3.8.2 ***Counterpoise Conductor.*** A bare underground electrical conductor providing an area of protection from the effects of lightning for underground raceway(s) or cable(s).

3.3.8.3 ***Down Conductor.*** A main conductor used to connect roof conductors to grounding electrodes.

3.3.8.4* ***Ground Loop Conductor.*** A main-size loop conductor installed within 12 ft (3.6 m) vertically of the base of the structure to provide a common ground potential.

AVA Documents Document Sharing Hub

Full document details: NFPA 780 2023

3.3.8.5 ***Loop Conductor.*** A main-sized conductor encircling a structure that is used to interconnect grounding electrodes, main conductors, or other electrically conductive bodies.

3.3.8.6* ***Main Conductor.*** A conductor intended to be used to carry lightning currents between strike termination devices and grounding electrodes.

3.3.8.7 ***Roof Conductor.*** A main conductor used to interconnect strike termination devices.

3.3.9 Copper-Clad Steel. Steel with a coating of copper bonded to it.

N **3.3.10 Connector.** A device to splice, tap, or terminate a conductor.

N **3.3.10.1*** ***Bolted Connector.*** A device that employs mechanical fasteners to maintain conductivity.

N **3.3.10.2*** ***Crimp Connector.*** A device that employs metal tabs (i.e., fingers) that enclose the conductor to maintain conductivity.

N **3.3.10.3*** ***Exothermic Weld.*** A welding process that employs molten metal to form a permanent connection.

N **3.3.10.4*** ***High-Compression Connector.*** A device that utilizes a high-tonnage compression tool to permanently deform the connector material to maintain conductivity.

3.3.11 Discharge Current.

3.3.11.1 ***Maximum Discharge Current (I_{max}).*** The maximum instantaneous value of a current through a surge-protective device (SPD) having an 8/20 µs waveform.

3.3.11.2 ***Nominal Discharge Current (I_n).*** Peak value of 8/20 µs current waveform selected by the manufacturer for which a surge-protective device (SPD) remains functional after 15 surges.

3.3.12 Explosives Materials. Materials, including explosives, blasting agents, and detonators, that are authorized for transportation by the Department of Transportation or the Department of Defense as explosive materials.

3.3.13 Fastener. An attachment device used to secure the conductor to the structure.

3.3.14 Flame Protection. Self-closing gauge hatches, vapor seals, pressure-vacuum breather valves, flame arresters, or other effective means to minimize the possibility of flame entering the vapor space of a tank.

3.3.15* Flammable Air-Vapor Mixtures. Flammable vapors mixed with air in proportions that will cause the mixture to burn rapidly when ignited.

3.3.16 Flammable Vapors. A concentration of constituents in air that exceeds 25 percent of its lower flammable limit (LFL). [**115,** 2020]

3.3.17 Flash Point. The minimum temperature at which a liquid or a solid emits vapor sufficient to form an ignitible mixture with air near the surface of the liquid or the solid.

• **3.3.18 Grounded (Grounding).** Connected (connecting) to ground or to a conductive body that extends the ground connection. [**70:**100]

Δ **3.3.19 Grounding Electrode.** A component of a lightning protection system installed for the purpose of transferring the current on the lightning conductors into the earth.

3.3.20 Hazard Division 1.4. Ammunition and explosives that produce a moderate fire with no significant blast or fragment hazards.

3.3.21 Headwall. A retaining wall at the outlet of an earth-covered magazine.

3.3.22 Heavy-Duty Stack. A smoke or vent stack with a flue that has a cross-sectional area of the flue greater than 500 in.^{2} (0.3 m^2) and a height greater than 75 ft (23 m).

3.3.23 Integral Lightning Protection System. A lightning protection system directly attached to the structure.

• **3.3.24* Light Base.** An enclosure used as a mounting base for airfield light fixtures, an isolation transformer housing, an electrical junction box, or any combination thereof.

3.3.25 Lightning Electromagnetic Impulse (LEMP). Electromagnetic effects of lightning current, which includes conducted surges as well as radiated impulse electromagnetic field effects.

3.3.26* Lightning Protection System. A complete system of strike termination devices, conductors (which could include conductive structural members), grounding electrodes, interconnecting conductors, surge protection, and other connectors and fittings required to complete the system.

3.3.27 Liquid.

3.3.27.1 ***Class I Flammable Liquid.*** Any liquid that has a closed-cup flash point below 100°F (37.8°C) and a Reid vapor pressure not exceeding an absolute pressure of 40 psi (276 kPa) at 100°F (37.8°C).

3.3.27.2 ***Combustible Liquid.*** Any liquid that has a closed-cup flash point at or above 100°F (37.8°C).

3.3.28 Magazine. A structure specifically designed to store ammunition and explosives.

3.3.28.1 ***Earth-Covered Magazine (ECM).*** An aboveground, earth-covered structure with a minimum of 24 in. (600 mm) soil cover depth and a slope of 2 horizontal and 1 vertical.

3.3.28.2 ***Portable Magazine.*** A magazine that can be moved from one location to another.

3.3.29 Magnetically Shielded. All or part of an object enclosed in a metallic grid or continuous screen that reduces the effects of the lightning electromagnetic pulse (LEMP) and consequences relating to the failure or upset of electronic systems and their components.

3.3.30 Mast-Type Lightning Protection System. A lightning protection system using one or more masts that are remote from the structure to provide a zone of protection as described in this standard.

3.3.31 Materials.

3.3.31.1* ***Class I Materials.*** Lightning conductors, air terminals, grounding electrodes, connectors, and associated fittings required for the protection of structures not exceeding 75 ft (23 m) in height.

Documents 2023 Edition Document Sharing Hub
Full document details: NFPA 780 2023

3.3.31.2* ***Class II Materials.*** Lightning conductors, air terminals, grounding electrodes, connectors, and associated fittings required for the protection of structures exceeding 75 ft (23 m) in height.

3.3.32* Mounting Stake. A steel angle iron driven vertically into the earth with provisions for the mounting of an elevated airfield lighting fixture.

3.3.33 Pavement. A hard, layered surface constructed to provide support for the loads imposed by airplanes and to produce a firm, stable, smooth, all-year, all-weather surface free of debris or other particles blown or picked up by propeller wash or jet blast.

3.3.33.1 ***Full Strength Pavement.*** Pavement designed to provide support for an aircraft for continual operations of the aircraft.

3.3.33.2 ***Shoulder Pavement.*** Pavement designed to provide support for an aircraft for unintentional or emergency operations of the aircraft.

3.3.34* Raceway. An enclosed channel designed expressly for holding wires, cables, or busbars, with additional functions as permitted in this standard. [**70:**100]

3.3.35 Sideflash. An electrical spark, caused by differences of potential, that occurs between conductive metal bodies or between conductive metal bodies and a component of a lightning protection system or ground.

3.3.36 Smart Structure. A structure that has a high degree of interconnected automatic systems for lighting, temperature control, multimedia systems, telecommunications, security, window and door operations, and other functions.

3.3.37 Solar Array. A group of photovoltaic (PV) modules or solar thermal collectors wired or connected together in a string or larger collection system.

3.3.38* Solar Panel. A general term for thermal collectors or photovoltaic (PV) modules.

3.3.39 Spark Gap. Any short air space between two conductors that are electrically insulated from or remotely electrically connected to each other.

3.3.40 Strike Termination Device. A conductive component of the lightning protection system capable of receiving a lightning strike and providing a connection to a path to ground. Strike termination devices include air terminals, metal masts, permanent metal parts of structures as described in 4.5.1.4, and overhead ground wires installed in catenary lightning protection systems.

3.3.41 Striking Distance. The distance over which the final breakdown of the initial lightning stroke to ground or to a grounded object occurs.

• Δ **3.3.42* Surge.** A transient wave of current, potential, or power in an electric circuit.

N **3.3.43* Surge Arrester.** A protective device for limiting surge voltages by discharging or bypassing the surge current.

N **3.3.44* Surge Protector.** A protective device for limiting excessive potential and current on signal, data, and communication circuits caused by lightning, contact with power conductors, power induction, and rises in ground potential, while also preventing the continued flow of the follow current while remaining capable of repeating these functions.

Δ **3.3.45* Surge-Protective Device (SPD).** A protective device for limiting the transient voltages by diverting or limiting the surge current and preventing the continued flow of the follow current while remaining capable of repeating these functions.

N **3.3.46* Tank Battery.** A group of tanks and the associated process equipment for crude oil production or saltwater disposal.

Δ **3.3.47 Transient.** A subcycle disturbance in the ac waveform that is evidenced by a sharp, brief discontinuity of the waveform.

3.3.48 Turf. Grass, stabilized soil, asphalt, or any other hard surface not intended as a paved shoulder, installed from the edge of the runway or taxiway full strength pavement to just outside the airfield lighting circuits.

•

3.3.49 Voltage.

3.3.49.1 ***Maximum Continuous Operating Voltage (MCOV).*** The maximum designated root mean square (rms) value of the power frequency voltage that can be continuously applied to the mode of protection of a surge protective-device (SPD).

3.3.49.2 ***Maximum Permitted DC Voltage (Vpvdc).*** The maximum permitted dc voltage rating across a photovoltaic surge-protective device (PV SPD).

3.3.49.3 ***Measured Limiting Voltage (MLV).*** Maximum magnitude of voltage that is measured across the terminals of the surge-protective device (SPD) during the application of impulses of specified waveshape and amplitude.

•

3.3.49.4 ***Rated Impulse Withstand Voltage Level (Withstand Voltage) (U_w).*** Impulse withstand voltage assigned by the manufacturer to wiring and equipment, or to a part of it, characterizing the specified withstand capability of its insulation against (transient) overvoltages.

3.3.50* Voltage Protection Rating (VPR). A rating (or ratings) selected by the manufacturer based on the measured limiting voltage determined when the surge-protective device (SPD) is subjected to a combination waveform with an open circuit voltage of 6 kV and a short-circuit current of 3 kA.

3.3.51 Watercraft. All forms of boats and vessels up to 300 gross tons (272 metric tons) used for pleasure or commercial purposes, but excluding seaplanes, hovercraft, vessels with a cargo of flammable liquids, and submersible vessels.

3.3.52 Zone of Protection. The space adjacent to a lightning protection system that is substantially immune to direct lightning flashes.

Chapter 4 General Requirements

4.1 General. This chapter provides general requirements for the protection of structures against lightning.

4.1.1 Material Class Requirements.

4.1.1.1* Structures shall be protected according to 4.1.1.1.1 or 4.1.1.1.2.

AVA Documents Document Sharing Hub
Full document details: NFPA 780 2023

4.1.1.1.1 Structures not exceeding 75 ft (23 m) in height shall be protected with Class I materials as shown in Table 4.1.1.1.1.

4.1.1.1.2 Structures exceeding 75 ft (23 m) in height shall be protected with Class II materials as shown in Table 4.1.1.1.2.

4.1.1.2 If part of a structure exceeds 75 ft (23 m) in height (e.g., a steeple) and the remaining portion does not exceed 75 ft (23 m) in height, the requirements for Class II air terminals and conductors shall apply only to that portion exceeding 75 ft (23 m) in height.

4.1.1.3 Class II conductors from the higher portion shall be extended to ground and shall be interconnected with the balance of the system.

N **4.1.1.4 Additions to Existing Structures.** An existing structure requiring Class I materials on which a new addition requires Class II materials shall be permitted to use the existing ground ring conductor installed and determined to be suitable for continued service.

Δ **4.2 Materials.** Protection systems shall be made up of materials that are resistant to or protected against corrosion.

Δ **4.2.1** Combinations of materials that form electrolytic couples that, in the presence of moisture, accelerate corrosion shall not be used *(see also Section 4.3)*.

4.2.2 One or more of the materials in 4.2.2.1 through 4.2.2.3 shall be used.

4.2.2.1 Copper. Copper shall be of the grade required for commercial electrical work and shall be of 95 percent conductivity when annealed.

4.2.2.2 Copper Alloys. Copper alloy shall be as resistant to corrosion as copper is.

4.2.2.3 Aluminum.

Δ **4.2.2.3.1*** Aluminum shall not be used within 18 in. (450 mm) of the point where the lightning protection system comes into contact with the earth or where rapid deterioration is possible.

4.2.2.3.2 Conductors shall be of electrical-grade aluminum with a minimum chemical composition of 99 percent aluminum.

4.2.3 Copper lightning protection materials shall not be installed on or in contact with aluminum roofing, aluminum siding, or other aluminum surfaces.

4.2.4* Aluminum lightning protection materials shall not be installed on or in contact with copper roofing materials or other copper surfaces, or where exposed to runoff from copper surfaces.

N **4.2.5*** Lightning protection systems shall be designed to minimize the effects caused by runoff from both copper and aluminum lightning protection materials to prevent the deterioration of incompatible materials and minimize the degradation of building aesthetics caused by staining.

Δ **Table 4.1.1.1.1 Minimum Class I Material Requirements**

		Copper		Aluminum	
Type of Conductor	**Parameter**	**US**	**SI**	**US**	**SI**
Air terminal, solid	Diameter	⅜ in.	9.5 mm	½ in.	12.7 mm
Air terminal, tubular	Diameter	⅝ in.	15.9 mm	⅝ in.	15.9 mm
	Wall thickness	0.033 in.	0.8 mm	0.064 in.	1.63 mm
Main conductor, cable	Size each strand	17 AWG	1.04 mm^2	14 AWG	2.08 mm^2
	Weight per length	187 lb/1000 ft	278 g/m	95 lb/1000 ft	141 g/m
	Cross-section area	57,400 cir. mils	29 mm^2	98,600 cir. mils	50 mm^2
Bonding conductor, cable (solid or stranded)	Size each strand	17 AWG	1.04 mm^2	14 AWG	2.08 mm^2
	Cross-section area	26,240 cir. mils	13.3 mm^2	41,100 cir. mils	20.8 mm^2
Bonding conductor, solid strip	Thickness	0.051 in.	1.30 mm	0.064 in.	1.63 mm
	Width	½ in.	12.7 mm	½ in.	12.7 mm
Main conductor, solid strip	Thickness	0.051 in.	1.30 mm	0.064 in.	1.63 mm
	Cross-section area	57,400 cir. mils	29 mm^2	98,600 cir. mils	50 mm^2

Δ **Table 4.1.1.1.2 Minimum Class II Material Requirements**

		Copper		Aluminum	
Type of Conductor	**Parameter**	**US**	**SI**	**US**	**SI**
Air terminal, solid	Diameter	½ in.	12.7 mm	⅝ in.	15.9 mm
Main conductor, cable	Size each strand	15 AWG	1.65 mm^2	13 AWG	2.62 mm^2
	Weight per length	375 lb/1000 ft	558 g/m	190 lb/1000 ft	283 g/m
	Cross-section area	115,000 cir. mils	58 mm^2	192,000 cir. mils	97 mm^2
Bonding conductor, cable (solid or stranded)	Size each strand	17 AWG	1.04 mm^2	14 AWG	2.08 mm^2
	Cross-section area	26,240 cir. mils	13.2 mm^2	41,100 cir. mils	20.8 mm^2
Bonding conductor, solid strip	Thickness	0.051 in.	1.30 mm	0.064 in.	1.63 mm
	Width	½ in.	12.7 mm	½ in.	12.7 mm
Main conductor, solid strip	Thickness	0.064 in.	1.63 mm	0.1026 in.	2.61 mm
	Cross-section area	115,000 cir. mils	58 mm^2	192,000 cir. mils	97 mm^2

Documents 2023 Edition Document Sharing Hub
Full document details: NFPA 780 2023

4.3 Corrosion Protection.

4.3.1 Protection shall be provided against the deterioration of lightning protection components caused by local atmospheric conditions.

4.3.2 Copper components installed within 24 in. (600 mm) of the top of a chimney or vent emitting corrosive gases shall be protected by a hot-dipped lead or tin coating.

4.3.3 An aluminum conductor shall not be attached to a surface coated with alkaline-based paint, embedded in concrete or masonry, or installed in a location subject to excessive moisture.

4.3.4 Connectors and Fittings.

Δ **4.3.4.1** Connectors and fittings shall be compatible for use with the conductor and surfaces on which they are installed.

4.3.4.2 Bimetallic connectors and fittings shall be used for splicing or bonding dissimilar metals.

4.3.4.3 Fittings used for the connection of aluminum down conductors to copper or copper-clad grounding equipment shall be of the bimetallic type.

•

4.4 Mechanical Damage or Displacement.

4.4.1* Any part of a lightning protection system that is subject to mechanical damage or displacement shall be protected with a protective molding or covering.

4.4.2 Where metal pipe or tubing is used around a conductor, the conductor shall be bonded to the pipe or tubing at both ends.

•

4.5 Strike Termination Devices.

4.5.1 General.

4.5.1.1 Strike termination devices shall include air terminals, metal masts, permanent metal parts of structures as described in 4.5.1.4, and overhead ground wires.

4.5.1.2 Combinations of these strike termination devices shall be permitted.

4.5.1.3 Strike termination devices shall be provided where required by other sections of this standard.

4.5.1.4 Metal parts of a structure that are exposed to direct lightning flashes and that have a metal thickness of 3/16 in. (4.8 mm) or greater shall only require connection to the lightning protection system in accordance with Section 4.8.

4.5.1.5* Metal rails outside a zone of protection having a wall thickness of 1/8 in. (3.2 mm) thick or greater shall only require connection to the lightning protection system in accordance with Section 4.8.

4.5.1.6 Strike termination devices shall be permitted but not required for those parts of a structure located within a zone of protection.

4.5.2 Air Terminals.

4.5.2.1* The tip of an air terminal shall be not less than 10 in. (254 mm) above the object or area it is to protect, as shown in Figure 4.5.2.1.

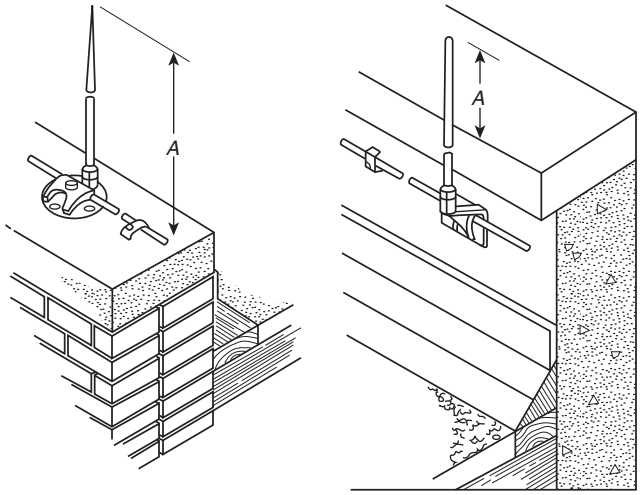

A: 10 in. (254 mm)
Note: Air terminal tip configurations can be sharp or blunt.

FIGURE 4.5.2.1 Air Terminal Height.

4.5.2.2 Air Terminal Support.

4.5.2.2.1 Air terminals shall be secured against overturning or displacement by at least one of the following methods:

(1) Attachment to the object to be protected
(2) Braces that are permanently and rigidly attached to the structure

4.5.2.2.2 Air terminals exceeding 24 in. (600 mm) in height shall be supported at a point not less than one-half their height, as shown in Figure 4.5.2.2.2.

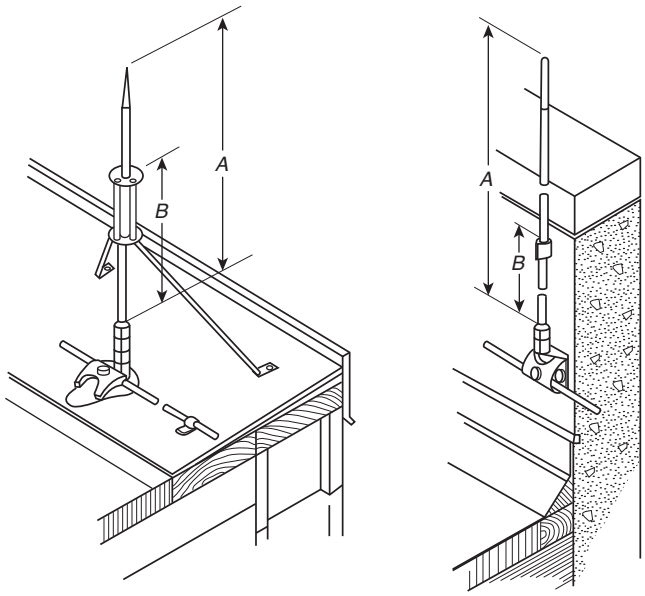

A: Air terminals over 24 in. (600 mm) high are supported.
B: Air terminal supports are located at a point not less than one-half the height of the air terminal.
Note: Air terminal tip configurations can be sharp or blunt.

FIGURE 4.5.2.2.2 Air Terminal Support.

AVA Documents Document Sharing Hub
Full document details: NFPA 780 2023

4.5.2.3 Ornaments.

4.5.2.3.1 An ornament or decoration on a freestanding, unbraced air terminal shall not present, in any plane, a wind-resistance area in excess of 20 in.^{2} (0.01 m^2).

4.5.2.3.2 The requirement of 4.5.2.3.1 shall permit the use of an ornamental ball 5 in. (127 mm) or less in diameter.

4.5.3 Lightning Protection Masts.

4.5.3.1 Lightning protection masts shall be permitted to provide a zone of protection.

4.5.3.2 Metal masts shall comply with 4.5.1.4 or be protected with a strike termination device.

4.5.3.3 Nonmetallic masts shall be provided with at least one strike termination device.

4.5.3.4 The top of the metallic mast shall have a metal thickness of 3/16 in. (4.8 mm) or greater or be provided with at least one strike termination device.

4.5.3.5 The mast shall be permitted to serve as the down conductor, provided it is electrically continuous and has a wall thickness of 0.064 in. (1.63 mm) minimum.

4.5.4 Overhead Ground Wires.

4.5.4.1 Overhead ground wires shall be permitted to provide a zone of protection.

4.5.4.2 Overhead ground wire material shall be constructed of aluminum, copper, stainless steel, galvanized steel, or protected steel such as copper-clad, aluminum-clad, or aluminum conductor steel reinforced (ACSR).

4.5.4.3 The overhead ground wire material shall be chosen to minimize corrosion from conditions at the site.

Δ **4.5.4.4** Overhead ground wires shall be self-supporting with minimum sag under all conditions.

N **4.5.4.5 Overhead Ground Wire Conductor Size.**

N **4.5.4.5.1** Overhead ground wires shall have a minimum cross-sectional area equal to that of a main conductor.

N **4.5.4.5.2** When steel or stainless-steel cable is used for the overhead ground wire, it shall have a minimum diameter of ½ in. (12.7 mm).

4.5.4.6 Connections between galvanized steel overhead ground wires and copper conductors shall be made through a suitable component that does not permit direct contact between the two materials.

4.5.5* Isolated Masts and Overhead Ground Wires. To prevent sideflashes, the minimum distance between a mast or overhead ground wire and the structure to be protected shall be calculated.

4.5.5.1 The sideflash distance from a point on a mast shall be calculated from the following formula and units shall be consistent (e.g., either all feet or all meters):

[4.5.5.1]

$$D = \frac{h}{6}$$

where:
D = sideflash distance from a mast
h = height of structure (or object being calculated)

4.5.5.2* The sideflash distance from a point on an overhead ground wire shall be calculated as follows and units shall be consistent (e.g., either all feet or all meters):

[4.5.5.2]

$$D = \frac{l}{6n}$$

where:
D = sideflash distance from a mast or overhead ground wire
l = length of lightning protection conductor between the nearest grounded point and the point being calculated (In the calculation of spacing from an overhead wire supported by a metal mast, it shall be permitted to consider the grounded point to be the attachment point on the metal mast where the overhead wire is electrically connected. For calculations of sideflash from a mast and the calculations for overhead wires supported by nonmetallic masts, the grounded point shall be considered the grounding system connection.)
n = 1 where there is one overhead ground wire that exceeds 100 ft (30 m) in horizontal length
n = 1.5 where there are one or two down conductors connected to the overhead ground wire spaced greater than 25 ft (7.6 m) and less than 100 ft (30 m) apart along the length of the overhead ground wire
n = 2.25 where there are more than two down conductors connected to the overhead ground wires spaced more than 25 ft (7.6 m) apart and less than 100 ft (30 m) apart along the length of the overhead ground wire

4.6 Strike Termination Devices on Roofs.

4.6.1 Roof Types. The zone of protection for the following roof types shall include the roof and appurtenances where protected in accordance with Section 4.6:

(1) Pitched roofs
(2) Flat or gently sloping roofs
(3) Dormers
(4) Domed roofs
(5) Roofs with ridges, wells, chimneys, or vents

4.6.1.1 Pitched roofs shall be defined as roofs having a span of 40 ft (12 m) or less and a slope ⅛ or greater and roofs having a span of more than 40 ft (12 m) and a slope ¼ or greater.

4.6.1.2 A flat or gently sloping roof is defined as a roof with a slope less than a pitched roof.

4.6.1.3 For the purposes of this standard, roof slopes shall be as shown in Figure 4.6.1.3.

4.6.1.4 Protection for typical roof types shall be as illustrated in Figure 4.6.1.4.

4.6.1.5 Roof hips shall not be considered as ridges for the protection of these types of roofs.

Documents 2023 Edition Document Sharing Hub
Full document details: NFPA 780 2023

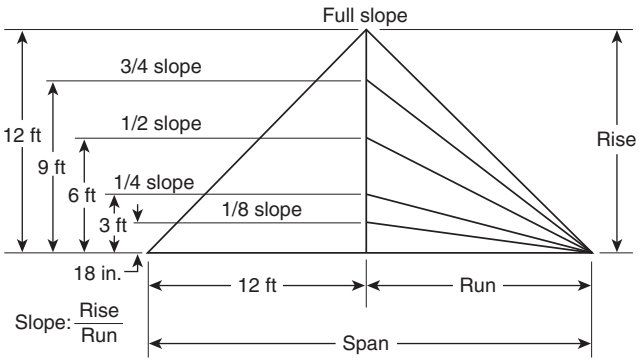

Example: Rise = 3 ft
Run = 12 ft

Slope: $\frac{3 \text{ ft}}{12 \text{ ft}}$ (1/4 slope)

For SI units, 1 in. = 25.4 mm; 1 ft = 0.3 m.

FIGURE 4.6.1.3 Roof Slope.

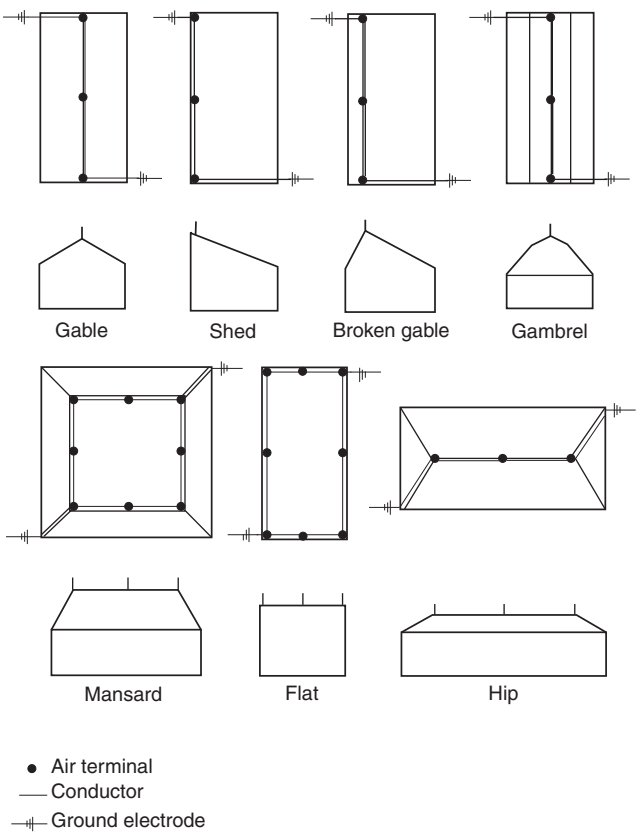

FIGURE 4.6.1.4 Protection Measures for Various Roof Types. (Drawings are top and end views of each roof type.)

4.6.2 Location of Devices.

4.6.2.1* As shown in Figure 4.6.2.1, the distance from strike termination devices to ridge ends on pitched roofs or to edges and outside corners of flat or gently sloping roofs shall not exceed 24 in. (600 mm).

4.6.2.2 Strike termination devices shall be placed on ridges of pitched roofs and around the perimeter of flat or gently sloping roofs at intervals not exceeding 20 ft (6 m).

4.6.2.3 Strike termination devices 24 in. (600 mm) or more above the object or area to be protected shall be permitted to be placed at intervals not exceeding 25 ft (7.6 m).

4.6.3 Pitched Roof Areas.

4.6.3.1 Strike termination devices shall not be required around the perimeters of pitched roofs with eave heights less than or equal to 50 ft (15 m) above grade.

4.6.3.2 For pitched roofs with a span of 100 ft (30 m) or less and eave heights greater than or equal to 50 ft (15 m) but less than 150 ft (45 m) above grade, it shall be permitted to omit strike termination devices at the eaves if the slope of that roof is equal to or steeper than the tangent of the arc at the eave elevation of a rolling sphere having a 150 ft (45 m) radius. *(See Figure 4.6.3.2.)*

4.6.3.2.1 Except for the gutter, any portion of the building that extends beyond that tangent shall be protected.

4.6.3.2.2 Eaves over 150 ft (45 m) above grade shall be protected in accordance with 4.6.2.

4.6.3.2.3* The tangent of the rolling sphere arc shall be considered as a vertical line over 150 ft (45 m) above grade.

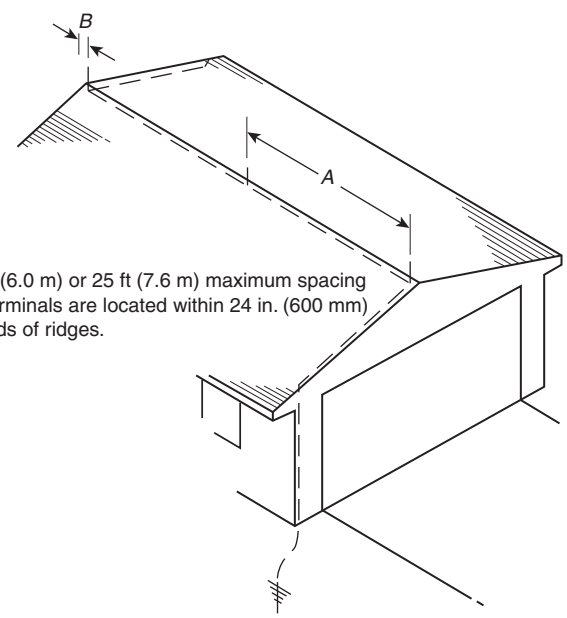

Δ **FIGURE 4.6.2.1 Air Terminals on a Pitched Roof.**

AVA Documents Document Sharing Hub
Full document details: NFPA 780 2023

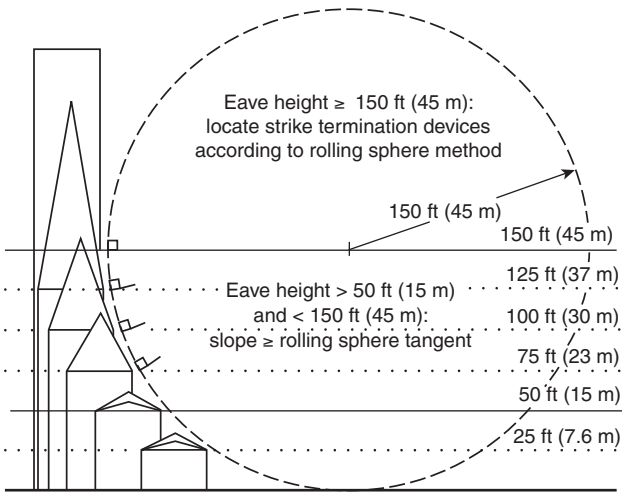

FIGURE 4.6.3.2 Illustration of Tangent of Rolling Sphere Method.

4.6.3.3 Pitched roofs not meeting the criteria of 4.6.3.1 and 4.6.3.2 shall be treated in the same manner as flat or gently sloping roofs.

4.6.4 Roofs with Intermediate Ridges. Strike termination devices shall be located along the outermost ridges of buildings that have a series of intermediate ridges at the same intervals as required by 4.6.2, as shown in Figure 4.6.4.

4.6.4.1 Strike termination devices shall be located on the intermediate ridges in accordance with the requirements for the spacing of strike termination devices on flat or gently sloping roofs.

4.6.4.2 If any intermediate ridge is higher than the outermost ridges, it shall be treated as a main ridge and protected according to 4.6.2.

4.6.5 Flat or Gently Sloping Roof Area.

4.6.5.1 Flat or gently sloping roofs that exceed 50 ft (15 m) in width or length shall have additional strike termination devices located at intervals not to exceed 50 ft (15 m) on the flat or gently sloping areas, as shown in Figure 4.6.5.1(a) and Figure 4.6.5.1(b).

4.6.5.2 Such areas shall be permitted to be protected using taller strike termination devices that create zones of protection using the rolling sphere method.

4.6.6 Flat or Gently Sloping Roofs with Irregular Perimeters. Structures that have exterior wall designs that result in irregular roof perimeters shall be treated on an individual basis.

4.6.6.1 The imaginary roof edge formed by the outermost projections shall be used to locate the strike termination devices in accordance with 4.6.2.

4.6.6.2 In all cases, strike termination devices shall be located in accordance with Section 4.6, as shown in Figure 4.6.6.2.

N **4.6.6.3** A curved perimeter of a structure shall be protected so that the outer edge of the structure is less than 24 in. (600 mm) from a straight line or chord between two adjacent air terminals, as shown in Figure 4.6.6.3.

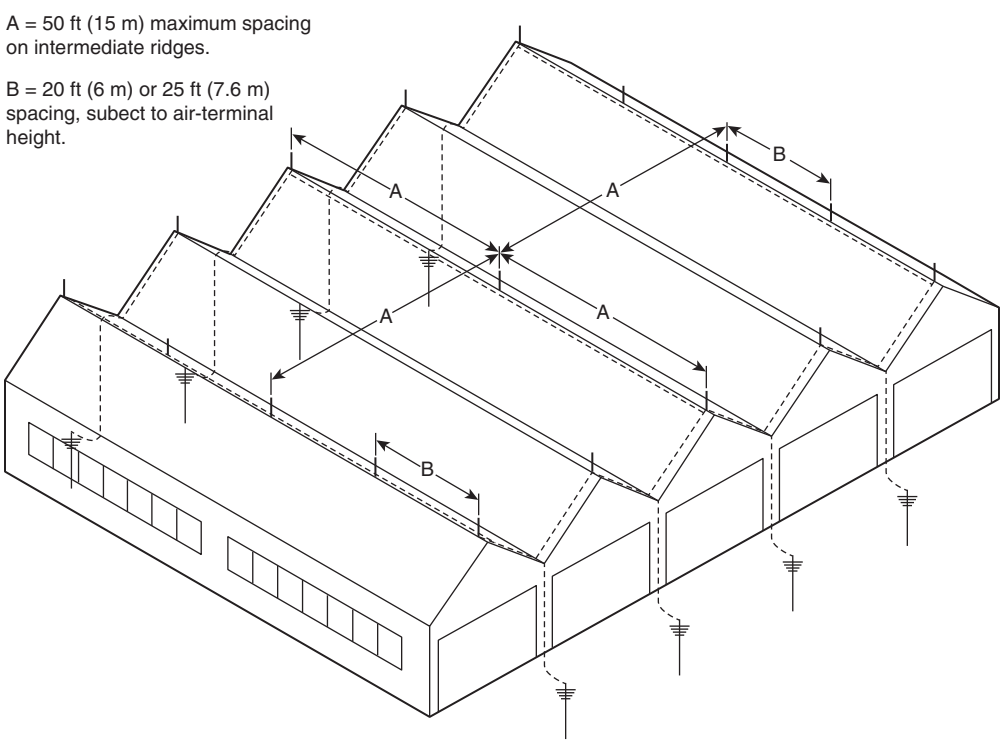

FIGURE 4.6.4 Air Terminals on Intermediate Ridges.

Documents 2023 Edition Document Sharing Hub
Full document details: NFPA 780 2023

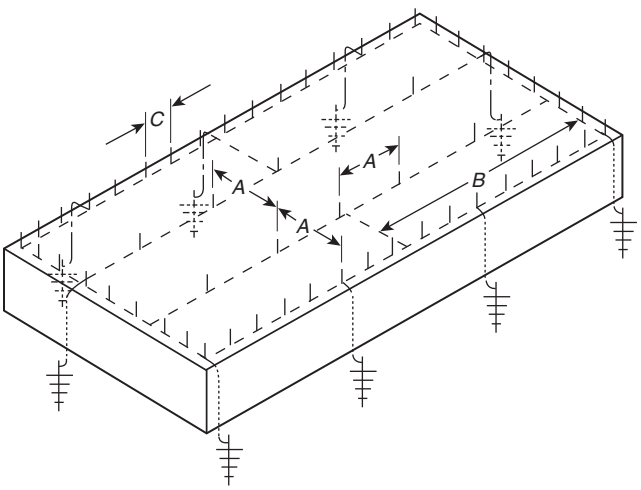

A: 50 ft (15 m) maximum spacing between air terminals
B: 150 ft (45 m) maximum length of cross-run conductor permitted without a connection from the cross-run conductor to the main perimeter or down conductor
C: 20 ft (6 m) or 25 ft (7.6 m) maximum spacings between air terminals along edge

FIGURE 4.6.5.1(a) Air Terminals on a Flat Roof.

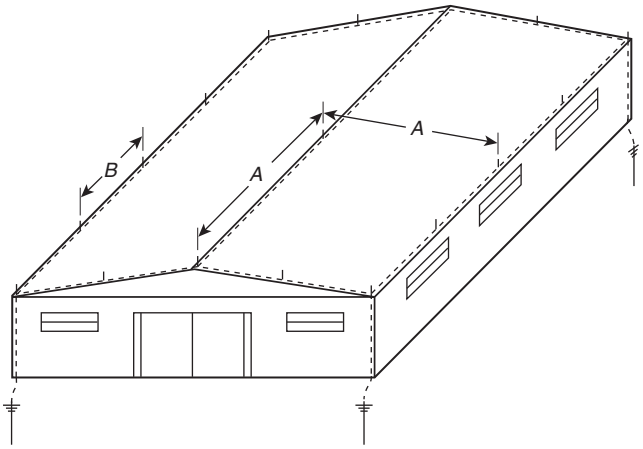

A: 50 ft (15 m) maximum spacing
B: 20 ft (6 m) or 25 ft (7.6 m) maximum spacing

FIGURE 4.6.5.1(b) Air Terminals on a Gently Sloping Roof.

4.6.7* Dormers.

4.6.7.1 Dormers as high as or higher than the main roof ridge shall be protected with strike termination devices, conductors, and grounds.

4.6.7.2 Dormers and projections below the main ridge shall require protection only on those areas extending outside a zone of protection.

4.6.8 Strike Termination Devices Installed on Vertical Roof Members. Strike termination devices installed on vertical roof members shall be permitted to use a single main-size cable to connect to a main roof conductor.

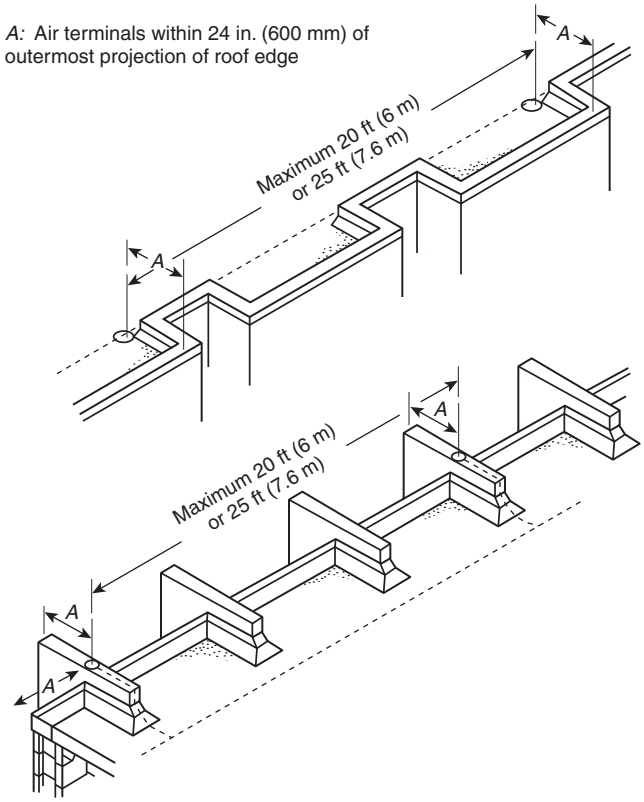

Δ **FIGURE 4.6.6.2 Flat or Gently Sloping Roof with an Irregular Perimeter.**

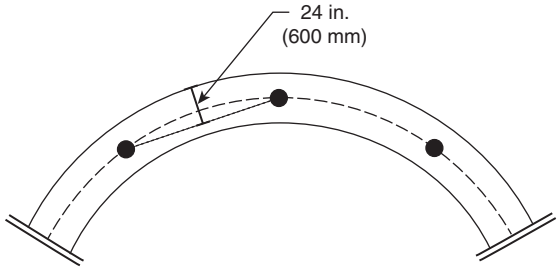

N **FIGURE 4.6.6.3 Flat or Gently Sloping Roof with a Curved Perimeter.**

4.6.8.1 The main roof conductor shall be run adjacent to the vertical roof members so that the single cable from the strike termination device is as short as possible and in no case longer than 16 ft (4.9 m).

4.6.8.2 The connection of the single cable to the down conductor shall be made with a tee splice or other connector listed for the purpose, as shown in Figure 4.6.8.2.

4.6.9 Open Areas in Flat Roofs. The perimeter of open areas, such as light or mechanical wells, shall be protected if the open area perimeter exceeds 300 ft (90 m), provided both rectangular dimensions exceed 50 ft (15 m).

4.6.10 Domed or Rounded Roofs. Strike termination devices shall be located so that no portion of the structure is located outside a zone of protection, as set forth in Section 4.7.

AVA Documents Document Sharing Hub
Full document details: NFPA 780 2023

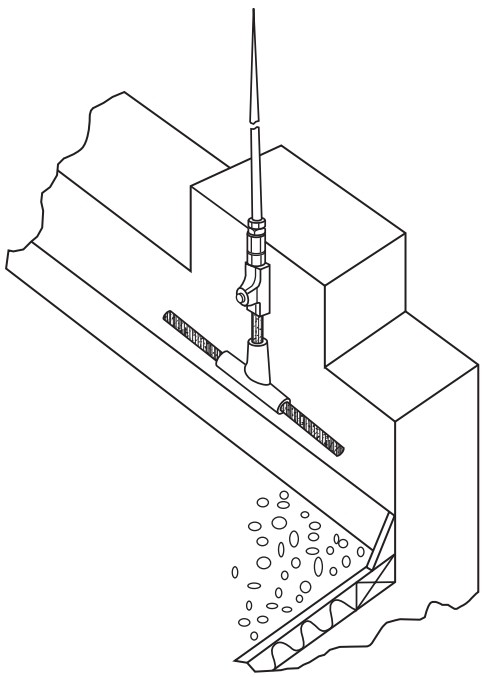

Note: Air terminal tip configurations can be sharp or blunt.

FIGURE 4.6.8.2 Strike Termination Devices Installed on Vertical Roof Members.

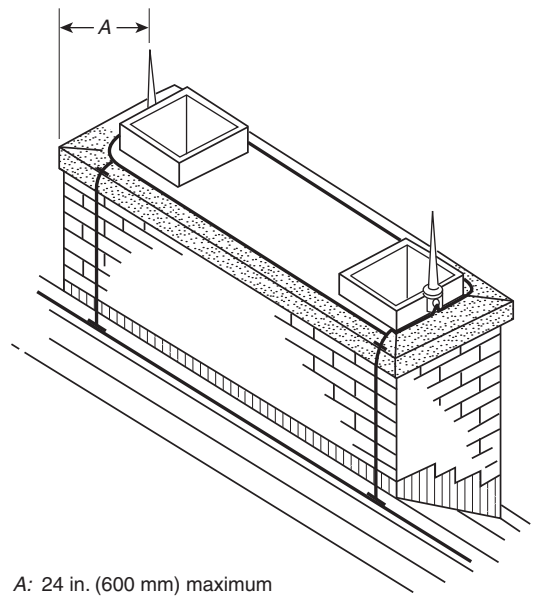

A: 24 in. (600 mm) maximum

Note: Air terminal tip configurations can be sharp or blunt.

Δ **FIGURE 4.6.11.2 Air Terminals on a Chimney.**

4.6.11 Chimneys, Vents, and Other Objects on Roofs Not in a Zone of Protection. Strike termination devices shall be required on all objects not located within a zone of protection, including metal objects having a metal thickness of less than 3⁄16 in. (4.8 mm) except as permitted in 4.6.11.1 through 4.6.11.4.

4.6.11.1 Metal objects having a metal thickness of 3⁄16 in. (4.8 mm) or more not located in a zone of protection shall require connection to the lightning protection system in accordance with the following:

(1) The metal object shall be connected to the lightning protection system using a main-size lightning conductor.
(2) The main-size conductor connecting the metal object shall provide two or more paths in accordance with Section 4.8.
(3) The main-size conductor shall be connected to the metal object with a main-size connector having a surface contact area of not less than 3 in.^{2} (1940 mm^2) or a minimum of 1½ in. (38 mm) of contact along the axis of a round surface.
(4) The main-size conductor shall be permitted to be connected to the metal object in accordance with the provisions for connection to framework in 4.18.3.1, 4.18.3.2, and 4.18.3.3.

4.6.11.2* Required strike termination devices shall be installed on objects, as shown in Figure 4.6.11.2, so that the distance from a strike termination device to an outside corner or the distance perpendicular to an outside edge is not greater than 24 in. (600 mm).

4.6.11.3 Where only one strike termination device is required on an object, at least one main-size conductor shall connect the strike termination device to a main conductor providing two or more paths to ground from that location in accordance with Section 4.8 and 4.8.2.

4.6.11.4 Objects on roofs that are less than 10 in. (254 mm) above the surface of the roof shall not require strike termination devices unless they are located within 3 ft (1 m) of the ridge or roof edge.

4.6.12 Metal Rooftop Units. Strike termination devices shall be required in accordance with 4.6.12.1 through 4.6.12.3.3 on all rooftop mechanical units with continuous metal housings less than 3⁄16 in. (4.8 mm) thick, such as air-conditioning/heating units, metal air intake/exhaust housings, and cooling towers, that are not located in a zone of protection.

4.6.12.1 Air terminals shall be installed in accordance with 4.6.2 through 4.6.5.

4.6.12.2 Air terminals shall be mounted to metal rooftop units by using one of the following methods:

(1) Adhered with adhesive bases to the metal units housing.
(2) Secured on bases having a minimum contact area of 3 in.^{2} (1940 mm^2), each to the bare metal of the unit's housing using mechanical fasteners.
(3) Drilled, tapped, and screwed directly into the unit's frame in accordance with 4.18.3.2 and 4.18.3.3.

4.6.12.3 Where the air terminal is mounted in accordance with 4.6.12.2(2) or 4.6.12.2(3), the unit's metal housing shall be permitted to be used as a main conductor where the housing minimum thickness is 0.064 in. (1.63 mm) and is electrically continuous.

4.6.12.3.1 At least two main-size conductors shall be installed to connect the unit to the lightning protection system.

Documents 2023 Edition Document Sharing Hub
Full document details: NFPA 780 2023

4.6.12.3.2 The connection shall be made to bare metal at the base or lower edges of the unit using main-size lightning conductors and bonding devices that have a surface contact area of not less than 3 in.^{2} (1940 mm^2) and shall provide two or more paths to ground, as is required for strike termination devices.

4.6.12.3.3 The two main bonding plates shall be located as far apart as practicable at the base or lower edges of the unit's electrically continuous metal housing and connected to the lightning protection system.

4.6.13* Movable or Rotating Objects on Roofs. Movable or rotating metal objects on roofs shall be protected in accordance with 4.6.13.1 or 4.6.13.2.

4.6.13.1 Where practicable, movable or rotating objects on roofs shall be placed in a zone of protection by using strike termination devices.

4.6.13.2 Movable or rotating metal objects outside a zone of protection shall be connected as follows:

(1) The fixed portion of movable or rotating metal objects on roofs shall be connected to the lightning protection system in accordance with 4.6.11.1.
(2) A bonding jumper connecting the metal movable or rotating portion to the fixed portion shall be permitted.

4.7 Zones of Protection. The geometry of the structure shall determine the zone of protection.

4.7.1 One or more of the following methods shall be used to determine the overall zone of protection:

(1) Air terminal placements, as described in Section 4.6
(2) The angle method, as described in 4.7.2
(3) The rolling sphere method, as described in 4.7.3

4.7.2 Multiple-Level Roofs.

4.7.2.1 For structures with multiple-level roofs no more than 50 ft (15 m) in height, the zone of protection shall include areas as identified in 4.7.2.3 and 4.7.2.4.

4.7.2.2 The zone of protection shall be permitted to be delineated as a cone, with the apex located at the highest point of the strike termination device and its surface formed by a 45-degree or 63-degree angle from the vertical, based on the height of the strike termination device above the ground as defined in 4.7.2.3 and 4.7.2.4.

4.7.2.3* Structures that do not exceed 25 ft (7.6 m) above earth shall be considered to protect lower portions of a structure located within a one-to-two zone of protection as shown in Figure 4.7.2.3(a) and Figure 4.7.2.3(b).

4.7.2.4* Structures that do not exceed 50 ft (15 m) above the earth shall be considered to protect lower portions of a structure located within a one-to-one zone of protection, as shown in Figure 4.7.2.4(a) and Figure 4.7.2.4(b).

4.7.3 Rolling Sphere Method.

4.7.3.1* The zone of protection shall include the space not intruded by a rolling sphere having a radius of the striking distance determined for the type of structure being protected, as shown in Figure 4.7.3.1.

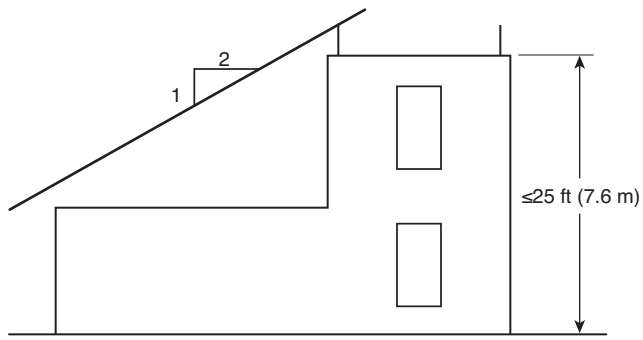

FIGURE 4.7.2.3(a) Lower Roof Protection for Flat-Roof Buildings 25 ft (7.6 m) or Less in Height.

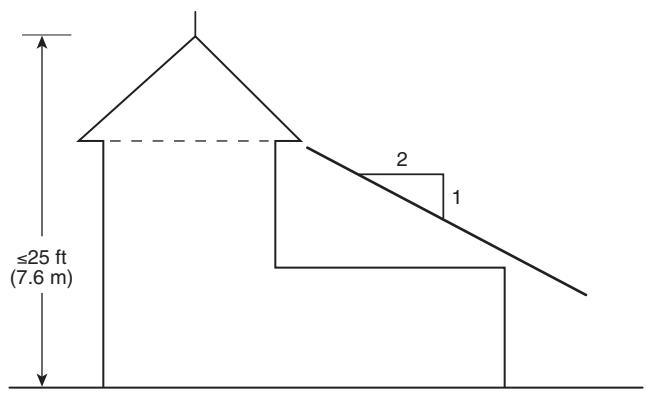

FIGURE 4.7.2.3(b) Lower Roof Protection Provided by Pitched-Roof Buildings 25 ft (7.6 m) or Less in Height.

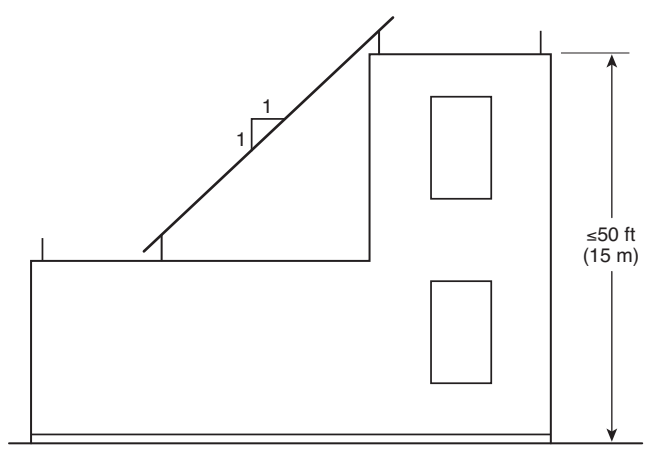

FIGURE 4.7.2.4(a) Lower Roof Protection for Buildings 50 ft (15 m) or Less in Height.

Documents Document Sharing Hub
Full document details: NFPA 780 2023

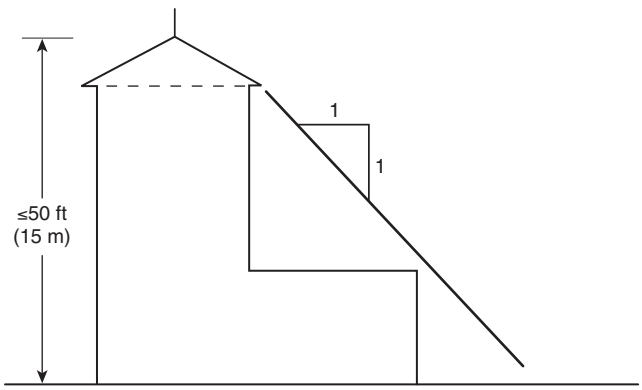

FIGURE 4.7.2.4(b) Lower Roof Protection Provided by Pitched-Roof Buildings 50 ft (15 m) or Less in Height.

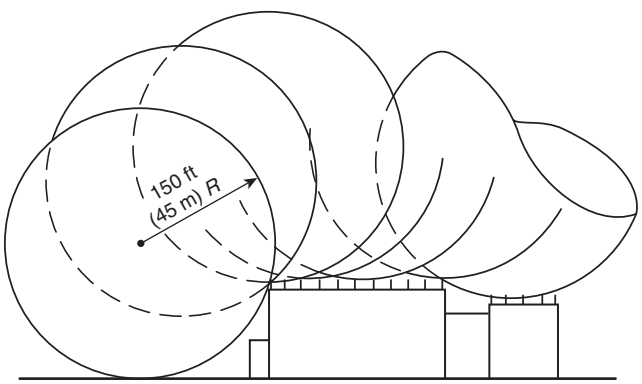

FIGURE 4.7.3.1 Zone of Protection Depicting Rolling Sphere Method.

4.7.3.1.1 Where the sphere is tangent to earth and resting against a strike termination device, all space in the vertical plane between the two points of contact and under the sphere shall be considered to be in the zone of protection. *(See Figure 4.7.3.1.1.)*

4.7.3.1.2 A zone of protection shall also be formed where such a sphere is resting on two or more strike termination devices and shall include the space in the vertical plane under the sphere and between those devices, as shown in Figure 4.7.3.1.

4.7.3.1.3 All possible placements of the sphere shall be considered when determining the overall zone of protection using the rolling sphere method.

4.7.3.1.4 The striking distance shall not exceed 150 ft (45 m).

4.7.3.2* For structure heights exceeding the striking distance above earth or above a lower strike termination device, the zone of protection shall be the space in the vertical plane between the points of contact and also under the sphere where the sphere is resting against a vertical surface of the structure and the lower strike termination device(s) or earth.

4.7.3.3 Under the rolling sphere method, the horizontal protected distance found geometrically by Figure A.4.7.3.1 also shall be permitted to be calculated using the following formula (units shall be consistent, ft or m):

[4.7.3.3]

$$d = \sqrt{h_1(2R - h_1)} - \sqrt{h_2(2R - h_2)}$$

where:
d = horizontal protected distance (ft or m)
h_1 = height of the higher roof (ft or m)
R = rolling sphere striking distance radius (ft or m)
h_2 = height of the lower roof (top of the object) (ft or m)

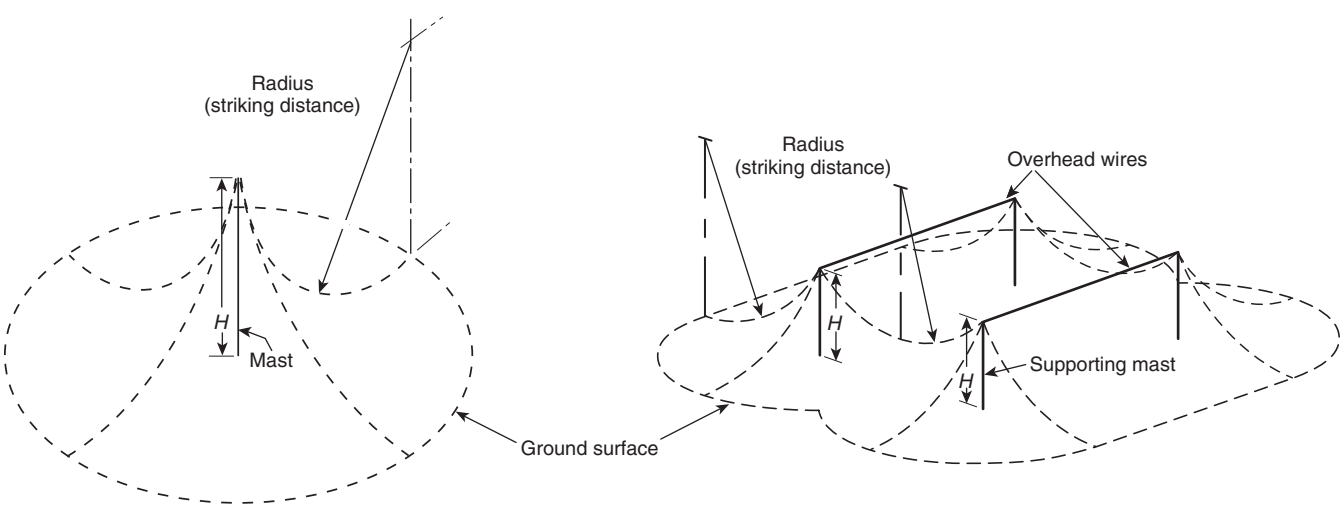

(a) Single Mast
Zone of protection defined by dashed lines

(b) Overhead Ground Wires
Zone of protection defined by ground wire(s) and dashed lines

FIGURE 4.7.3.1.1 Single Mast Zone of Protection (a) and Overhead Ground Wires Zone of Protection (b).

Documents
2023 Edition
Document Sharing Hub
Full document details: NFPA 780 2023

4.7.3.3.1 For the formula to be valid, the sphere shall be either tangent to the lower roof or in contact with the earth and in contact with the vertical side of the higher portion of the structure.

4.7.3.3.2 In addition, the difference in heights between the upper and lower roofs or earth shall be the striking distance or less.

4.8 Conductors. Main conductors shall comply with all of the following:

(1) Interconnect all strike termination devices
(2) Form two or more paths from each strike termination device downward, horizontally, or rising at no more than ¼ slope to connections with grounding electrodes, except as permitted by 4.8.1 and 4.8.2
(3) Permit one rising path not to exceed 50 ft (15 m) in length on pitched roofs
(4) Permit one rising path not exceeding ¼ slope on flat or gently sloping roofs

4.8.1* One-Way Path. Strike termination devices on a lower roof level that are interconnected by a conductor run from a higher roof level shall require only one horizontal or downward path to ground, provided the lower level roof conductor run does not exceed 40 ft (12 m).

4.8.2 Dead Ends. A "dead ended" main conductor shall be permitted between a single strike termination device, connector, or fitting and a main conductor run under all of the following conditions:

(1) Where the main-size conductor run to which the dead end is connected has a two-way path to ground
(2) At a main protected roof level, where the horizontal portion of the dead-end conductor is not more than 8 ft (2.4 m) in total length
(3) On a roof below the main protected roof level, where the dead-end conductor is not more than 16 ft (4.9 m) in total length, as shown in Figure 4.8.2
(4) Where all dead-end conductor runs maintain a horizontal or downward course from the strike termination device to the connection point with the main conductor run

4.8.3 Substitution of Main Conductor.

4.8.3.1 Ancillary metal parts of a structure, such as eave troughs, downspouts, ladders, chutes, or other metal parts except as permitted in 4.18.1, shall not be substituted for the main conductor.

4.8.3.2 Permanent exterior metal handrails and ladders that are subject to direct lightning strikes (e.g., on roofs or between roofs) and are electrically continuous shall be permitted to be used as main conductors where the minimum thickness is 0.064 in. (1.63 mm).

4.8.3.3 Metal roofing or siding having a thickness of less than 3/16 in. (4.8 mm) shall not be substituted for main conductors.

4.8.4* "U" or "V" Pockets.

4.8.4.1 Conductors shall maintain coursing free from "U" or "V" (down and up) pockets.

4.8.4.2 "U" and "V" pockets shall be provided with a down conductor from the base of the pocket to ground or to an adjacent down conductor, as shown in Figure 4.8.4.2.

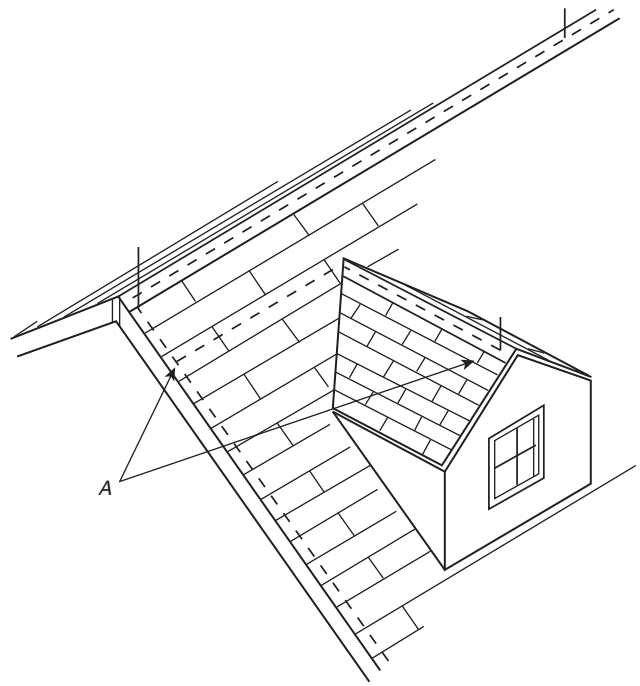

A: Permissible dead-end total conductor length not over 16 ft (4.9 m)

FIGURE 4.8.2 Dead End.

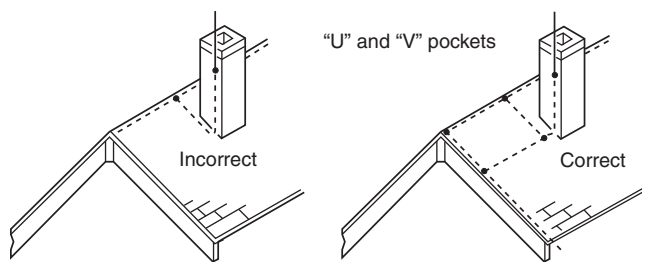

FIGURE 4.8.4.2 Pockets.

4.8.4.3 Conductors shall be permitted to be routed in an upward coursing for a vertical distance of no greater than 8 in. (200 mm) at through-roof or through-wall connections only, in order to mitigate tripping hazards, provided that the coursing complies with 4.8.5.

4.8.5 Conductor Bends. No bend of a conductor shall form an included angle of less than 90 degrees, nor shall it have a radius of bend less than 8 in. (200 mm), as shown in Figure 4.8.5.

4.8.6 Conductor Supports.

4.8.6.1 Conductors shall be permitted to be coursed through air without support for a distance of 3 ft (1 m) or less.

4.8.6.2 Conductors that must be coursed through air for distances longer than that permitted in 4.8.6.1 shall be provided with a positive means of support that will prevent damage or displacement of the conductor.

AVA Documents Document Sharing Hub
Full document details: NFPA 780 2023

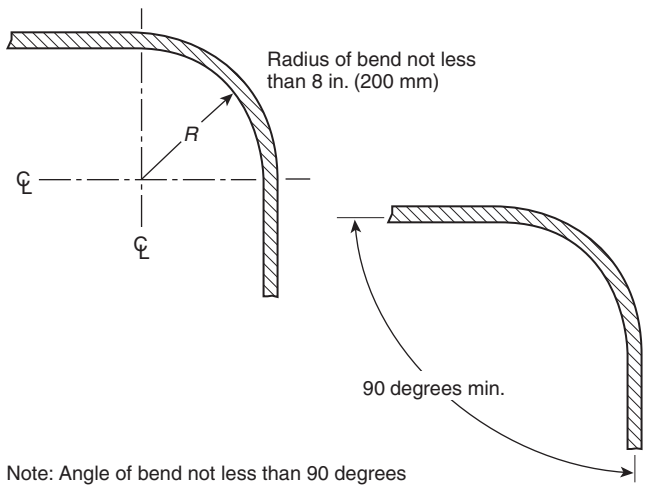

FIGURE 4.8.5 Conductor Bends.

4.8.7 Roof Conductors.

4.8.7.1 Roof conductors shall be coursed along ridges of gable, gambrel, and hip roofs; around the perimeter of flat roofs; behind or on top of parapets; and across flat or gently sloping roof areas as required to interconnect all strike termination devices.

4.8.7.2 Conductors shall be coursed through or around obstructions (e.g., cupolas and ventilators) in a horizontal plane with the main conductor.

4.8.8 Cross-Run Conductors.

4.8.8.1* Cross-run conductors (main conductors) shall be required to interconnect the strike termination devices on flat or gently sloping roofs that exceed 50 ft (15 m) in width.

4.8.8.2 Cross-run conductors shall be connected to the main perimeter cable at intervals not exceeding 150 ft (45 m), as shown in Figure 4.6.5.1(a).

4.8.9 Down Conductors.

4.8.9.1 Down conductors shall be as widely separated as practicable.

4.8.9.2 The location of down conductors shall depend on considerations such as the following:

(1) Placement of strike termination devices
(2) Most direct coursing of conductors
(3) Earth conditions
(4) Security against displacement
(5) Location of large metallic bodies
(6) Location of underground metallic piping systems

4.8.10 Number of Down Conductors. At least two down conductors shall be provided on any kind of structure, including steeples.

4.8.10.1 Structures exceeding 250 ft (76 m) in perimeter shall have a down conductor for every 100 ft (30 m) of perimeter or fraction thereof.

4.8.10.2 The total number of down conductors on structures having flat or gently sloping roofs shall be such that the average distance between all down conductors along the perimeter of the structure does not exceed 100 ft (30 m).

4.8.10.3 Irregularly shaped structures shall have additional down conductors as necessary to provide a two-way path from each strike termination device.

4.8.10.4 For a flat or gently sloping roof structure, only the perimeter of the roof areas requiring protection shall be measured.

4.8.10.5 When determining the perimeter of a pitched roof structure, the horizontal projection (footprint) of the protected roof shall be measured as shown in Figure 4.8.10.5.

4.8.10.6 Lower roofs or projections that are located within a zone of protection shall not be required to be included in the perimeter measurement.

4.8.11 Protecting Down Conductors. Down conductors located where subject to physical damage or displacement shall be guarded.

4.8.11.1 Metallic guards shall be bonded at each end.

4.8.11.2 The down conductor shall be protected for a minimum distance of 6 ft (1.8 m) above grade level.

4.8.12 Down Conductors Entering Corrosive Soil. Down conductors entering corrosive soil shall be protected against corrosion by a protective covering beginning at a point 3 ft (1 m) above grade level and extending for their entire length below grade.

Δ **4.8.13* Down Conductors and Structural Columns.** Down conductors coursed in reinforced concrete columns or coursed on or within the calculated bonding distance of reinforced concrete columns or structural steel columns in accordance with 4.15.2.5 or 4.15.2.6 shall be bonded to the reinforcing steel or the structural steel member at its upper and lower extremities.

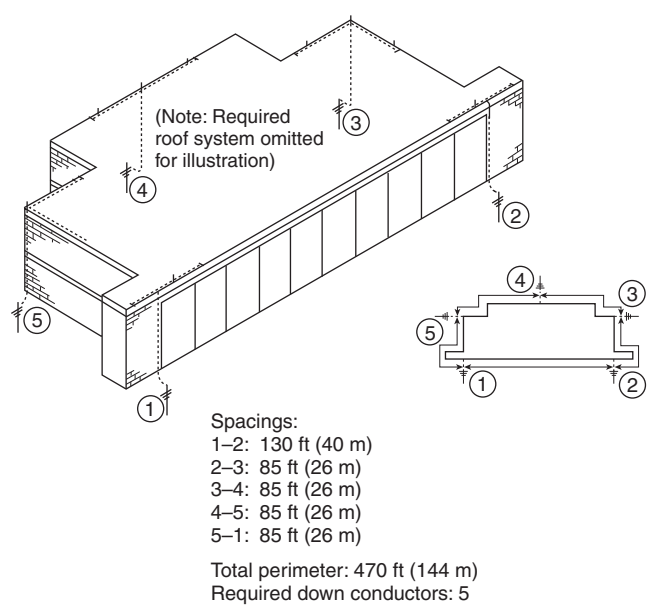

FIGURE 4.8.10.5 Quantity of Down Conductors.

Documents 2023 Edition Document Sharing Hub
Full document details: NFPA 780 2023

4.8.13.1 In the case of long, vertical, metallic members, an additional connection shall be made at intervals not exceeding 200 ft (60 m).

4.8.13.2 The connections for 4.8.13.1 shall be made using listed clamps or listed bonding plates or by welding or brazing.

4.8.13.3 Where the bonding requirements of 4.8.13.1 and 4.8.13.2 are not satisfied, provisions shall be made to ensure the required interconnection of these parallel vertical paths.

4.8.14 Down Conductors in Nonmetallic Enclosures. The use of PVC conduit or other nonmetallic chase shall not eliminate the need to satisfy the bonding requirements of Sections 4.14 and 4.15.

4.9 Conductor Fasteners. Conductors shall be fastened to the structure upon which they are placed at intervals not exceeding 3 ft (1 m).

4.9.1 Attachment by nails, screws, bolts, or adhesive shall be permitted to be used as necessary.

4.9.2 The fasteners shall not be subject to breakage.

4.9.3 Roofing membrane strapped over the conductor shall not be considered a suitable fastener.

4.9.4 Fasteners shall be of the same materials as the conductor or of a material equally resistant to corrosion as that of the conductor.

4.9.5 No combination of materials shall be used that will form an electrolytic couple of such a nature that, in the presence of moisture, corrosion will be accelerated.

4.10 Masonry Anchors. Masonry anchors used to attach lightning protection materials shall have a minimum outside diameter of ¼ in. (6.4 mm).

4.10.1 Holes made to receive the body of the anchor shall be of the correct size and made in the brick, stone, or other masonry unit rather than in mortar joints.

4.10.2 Where the anchors are installed, the fit shall be tight against moisture, thus reducing the possibility of damage due to freezing.

4.11 Connectors. Connectors shall be used at all "end-to-end," "tee," "Y," or parallel splices of lightning conductors.

4.11.1 Connectors shall be attached so as to withstand a pull test of 200 lb (890 N).

4.11.2 Fittings used for required connections to metal bodies in or on a structure shall be secured to the metal body by bolting, brazing, welding, screwing, or high-compression connectors listed for the purpose.

4.11.3 Conductor connections shall be of the bolted, exothermically welded, high-compression, or crimp type.

Δ **4.11.4** Crimp connections shall not be used with Class II conductors.

4.12 Grounding Electrodes.

4.12.1* General.

Δ **4.12.1.1*** Each down conductor shall terminate to one of the following:

(1) One or more grounding electrodes dedicated to the lightning protection system

(2)* A grounding electrode system of a building, structure, or facility that has multiple grounding electrodes bonded together with a ground ring electrode meeting the requirements of 4.12.4

4.12.1.2 The design, size, and depth of grounding electrodes shall comply with 4.12.2 through 4.12.8.

4.12.1.3 Underground metallic piping or ground rod–type electrodes for electrical, communications, or other systems shall not be used in lieu of lightning grounding electrodes.

4.12.1.4 The down conductor(s) shall be attached permanently to the grounding electrode system by bolting, brazing, welding, or high-compression connectors listed for the purpose.

4.12.1.5 Where practicable, grounding electrodes shall be installed below the frost line (excluding shallow topsoil conditions).

4.12.1.6* In corrosive environments, the use of stainless-steel alloy grounding electrodes shall be permitted.

4.12.2 Ground Rods.

4.12.2.1* Ground rods shall be not less than ½ in. (12.7 mm) in diameter and 8 ft (2.4 m) long.

4.12.2.2 Ground rods shall be copper-clad steel, solid copper, or stainless steel.

4.12.2.3 Rods shall be free of paint or other nonconductive coatings.

4.12.2.4 Ground Rod Depth.

4.12.2.4.1 The ground rods shall extend vertically not less than 10 ft (3 m) into the earth, as illustrated in Figure 4.12.2.4.1.

4.12.2.4.2 The earth shall be compacted and made tight against the length of the conductor and ground rod.

4.12.2.5* Multiple Ground Rods. Where multiple connected ground rods are used, the separation between any two ground rods shall be at least the sum of their driven depths, where practicable.

4.12.3* Concrete-Encased Electrodes. Concrete-encased electrodes shall be used only in new construction.

4.12.3.1 The electrode shall be located near the bottom of a concrete foundation or footing that is in direct contact with the earth and shall be encased by not less than 2 in. (50 mm) of concrete.

4.12.3.2* The concrete-encased electrode shall consist of one of the following:

(1) Not less than 20 ft (6 m) of bare copper main-size conductor

(2) At least 20 ft (6 m) of one or more bare or electrically conductive coated steel reinforcing bars or rods not less than ½ in. (12.7 mm) in diameter that have been effectively bonded together by welding, structural mechanical coupling, or overlapping 20 diameters and wire tying

N **4.12.3.3** Nonconductive or resistive coatings on steel reinforcing bars shall not be permitted.

AVA Documents Document Sharing Hub
Full document details: NFPA 780 2023

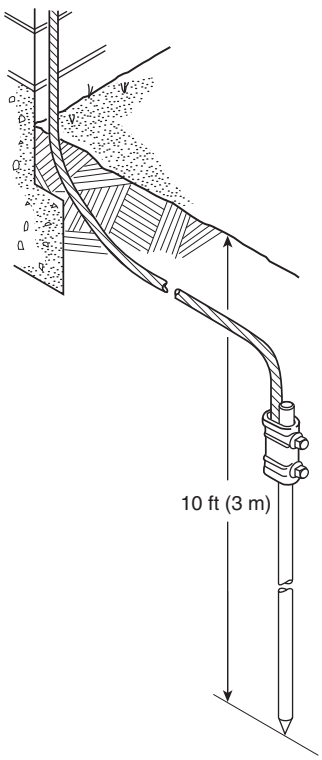

FIGURE 4.12.2.4.1 Typical Single Ground Rod Installation.

4.12.3.4 A test or connection point shall be provided on each concrete-encased electrode to enable periodic maintenance and testing of the ground system. *(See Figure 4.12.3.4.)*

4.12.4 Ground Ring Electrode. A ground ring electrode encircling a structure shall be as shown in Figure 4.12.4.

4.12.4.1* The ground ring electrode shall be in direct contact with earth at a depth of not less than 18 in. (450 mm) or encased in a concrete footing in accordance with 4.12.3.

4.12.4.2 The ground ring electrode shall be a main-size (lightning) conductor or a grounding conductor of equivalent or greater cross-sectional area.

4.12.5* Radials.

4.12.5.1 A radial electrode system shall consist of one or more main-size conductors, each in a separate trench extending outward from the location of each down conductor.

4.12.5.2 Each radial electrode shall be not less than 12 ft (3.6 m) in length.

4.12.5.3* The radial electrode shall be buried not less than 18 in. (450 mm) below grade.

4.12.6 Plate Electrode or Ground Plate Electrode.

4.12.6.1* A ground plate or plate electrode shall have a minimum thickness of 0.032 in. (0.8 mm) and a minimum surface area of 2 ft^2 (0.18 m^2).

4.12.6.2* The ground plate electrode shall be buried not less than 18 in. (450 mm) below grade.

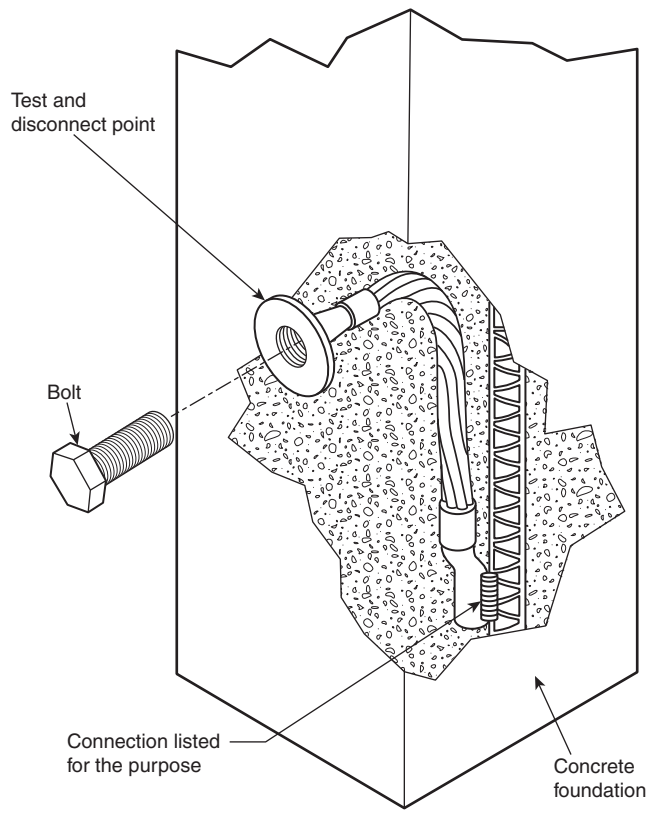

FIGURE 4.12.3.4 Typical Concrete-Encased Electrode Test and Disconnect Point.

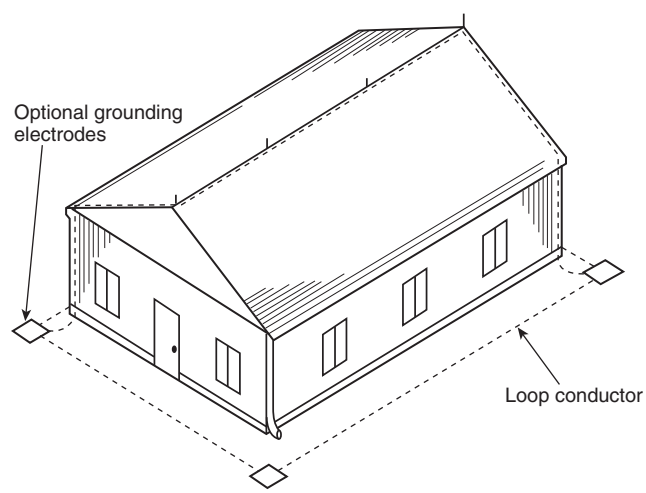

FIGURE 4.12.4 Typical Ground Ring Electrode Installation.

Documents 2023 Edition Document Sharing Hub
Full document details: NFPA 780 2023

4.12.7 Combinations. Combinations of the grounding electrodes in Section 4.12 shall be permitted.

4.12.8 Grounding Electrode Selection Criteria. The site limitations and soil conditions shall determine the selection of the type or combinations of types of grounding electrodes used.

4.12.8.1* Shallow Topsoil. The methods in 4.12.3 through 4.12.7 shall be used in shallow topsoil conditions where practicable.

4.12.8.1.1 Where topsoil depth is less than 18 in. (450 mm), it shall be permitted to provide a ground ring electrode, radials, and/or ground plate electrodes buried at the maximum depth of topsoil available.

4.12.8.1.2* The grounding electrode for shallow topsoil shall be one or more of the following, buried to the maximum depth of topsoil available:

(1) A ground ring electrode, in accordance with 4.12.4, a minimum distance of 24 in. (600 mm) from the foundation or exterior footing
(2) Radial(s) in accordance with 4.12.5
(3) A plate electrode in accordance with 4.12.6, a minimum distance of 24 in. (600 mm) from the foundation or exterior footing

Δ **4.12.8.1.3 Bedrock.**

N **4.12.8.1.3.1** Where use of the methods in 4.12.8.1.2 is not possible, radial(s) shall be permitted to be laid directly on bedrock and extend a minimum distance of 12 ft (3.6 m) from the foundation or exterior footing.

N **4.12.8.1.3.2** A ground loop conductor encircling the structure shall be permitted to be laid directly on bedrock a minimum distance of 24 in. (600 mm) from the foundation or exterior footing.

4.12.8.1.3.3 In those cases where the grounding conductor is laid directly on bedrock, the conductor shall be secured to the bedrock every 3 ft (1 m) with nails, conductive cement, or a conductive adhesive to ensure electrical contact and protect against movement.

4.12.8.2 Sandy Soil Conditions. Multiple grounding electrodes shall be used to augment the lightning grounding electrode system in installations characterized by high soil resistivity, such as in sandy or gravelly soil conditions.

4.12.8.3 Zero Property Line Conditions. The lack of access to property outside the building footprint shall require additional considerations for grounding electrodes.

4.12.8.3.1* Grounding electrodes located under basement slabs or in crawl spaces shall be installed as near as practicable to the outside perimeter of the structure.

4.12.8.3.2 Ground rods in accordance with 4.12.2, ground ring electrodes in accordance with 4.12.4, radials in accordance with 4.12.5, or ground plate electrodes in accordance with 4.12.6 shall be installed below the structure in compacted earth, tight against the electrode.

4.12.8.3.3 Where earth depth under the building is insufficient to meet electrode placement requirements, concrete-encased electrodes or the requirements for shallow topsoil shall be used.

4.13 Common Bonding of Grounded Systems.

4.13.1* General. All grounded media and buried metallic conductors (including underground metallic piping systems) that can assist in providing a path for lightning currents in or on a structure shall be interconnected to the lightning protection system within 12 ft (3.6 m) vertically of the base of the structure to provide a common ground potential.

4.13.2* For structures exceeding 60 ft (18 m) in height, the interconnection of the lightning protection system grounding electrodes and other grounded media shall be in the form of a ground loop conductor.

4.13.3* This interconnection shall include all building grounding electrode systems, including lightning protection, electric service, communication, and antenna system grounding electrodes.

Δ **4.13.4 Underground Metallic Piping Systems.**

N **4.13.4.1** Underground metallic piping systems requiring interconnection to the lightning protection system shall include, but not be limited to, the following:

(1) Water service
(2) Well casings located within 25 ft (7.6 m) of the lightning protection grounding system
(3) Gas piping
(4) Underground conduits
(5) Underground liquefied petroleum gas piping systems

N **4.13.4.2** If a water pipe is not electrically continuous due to the use of nonconductive pipe sections or for any other reason, the nonconductive sections shall be bridged with main-size conductors or the connection shall be made at a point where the required electrical continuity can be ensured.

4.13.5* Where the building grounded systems noted in 4.13.1 are interconnected at a common accessible point in or on the structure, the lightning protection system shall have only one main-size conductor connected to the common bonding point. This common bonding point shall be permitted to include a ground bar, a section of water pipe, or the metallic structural frame in accordance with *NFPA 70*.

4.13.6 Bonding Interconnections.

4.13.6.1 Where bonding of the lightning protection grounding system, grounded media, and buried metallic conductors has not been accomplished at a common point, interconnection shall be provided according to the following:

(1) Grounded media and buried metallic conductors shall be bonded to the lightning protection grounding system below a height 12 ft (3.6 m) vertically above the base of the structure.
(2)* Where grounded media and buried metallic conductors are inherently bonded through construction to the lightning protection grounding system, additional bonding shall be permitted but not required.
(3) The continuous metal framework of a structure shall be connected to the lightning protection system *(see 4.8.13 and Section 4.18)*.
(4) Main-size lightning conductors shall be used for direct connection of grounded media and buried metallic conductors to the lightning protection system.

AVA Documents Document Sharing Hub
Full document details: NFPA 780 2023

(5) A continuous metal water pipe system providing interconnection of building grounded systems shall be connected to the lightning protection system.

(6)* Interconnection to a gas line shall be made on the customer's side of the meter.

4.13.6.2* Where galvanic corrosion is a concern or where a direct bond is prohibited by local code, an isolating spark gap shall be permitted.

4.14 Potential Equalization.

4.14.1 Ground-Level Potential Equalization. Ground-level potential equalization shall be required in accordance with Section 4.13.

4.14.2* Roof-Level Potential Equalization. For structures exceeding 60 ft (18 m) in height, all grounded media in or on the structure shall be interconnected within 12 ft (3.6 m) of the main roof level.

4.14.3 Intermediate-Level Potential Equalization. Intermediate-level potential equalization shall be accomplished by the interconnection of the lightning protection system down conductors and other grounded media at the intermediate levels between the roof and the base of a structure in accordance with 4.14.3.1 through 4.14.3.3.

4.14.3.1 Steel-Framed Structures. Intermediate-loop conductors shall not be required for steel-framed structures where the framing is electrically continuous.

4.14.3.2 Reinforced Concrete Structures Where the Reinforcement Is Interconnected and Grounded in Accordance with 4.17.3. Down conductors and other grounded media shall be interconnected with a loop conductor at intermediate levels not exceeding 200 ft (60 m).

4.14.3.3 Other Structures. Down conductors and other grounded media shall be interconnected with a loop conductor at intermediate levels not exceeding 60 ft (18 m).

4.14.4 Materials. Horizontal loop conductors used for the interconnection of lightning protection system down conductors, grounding electrodes, or other grounded media shall be sized no smaller than the size required for the main conductor, as listed in Table 4.1.1.1.1 and Table 4.1.1.1.2.

4.15* Bonding of Metal Bodies. Metal bodies not covered by other sections of this standard, located outside or inside a structure, that contribute to lightning hazards because they are grounded or assist in providing a path to ground for lightning currents shall be bonded to the lightning protection system in accordance with Section 4.15.

4.15.1 Long, Vertical Metal Bodies. Long, vertical metal bodies shall be bonded in accordance with 4.15.1.1 through 4.15.1.3.

4.15.1.1 Steel-Framed Structures. Grounded and ungrounded metal bodies exceeding 60 ft (18 m) in vertical length shall be bonded to structural steel members as near as practicable to their extremities unless inherently bonded through construction at those locations.

4.15.1.2 Reinforced Concrete Structures. Grounded and ungrounded metal bodies exceeding 60 ft (18 m) in vertical length in or on reinforced concrete structures, where the reinforcement is interconnected and grounded in accordance with 4.17.3, shall be bonded to the lightning protection system as near as practicable to their extremities unless inherently bonded through construction at those locations.

4.15.1.3 Other Structures. Bonding of grounded or ungrounded long, vertical metal bodies shall be determined by 4.15.2 or 4.15.4, respectively.

4.15.2 Grounded Metal Bodies. Bonding of grounded metal bodies not covered in 4.15.1 shall be accomplished in accordance with 4.15.2.1 through 4.15.2.6.

4.15.2.1 Where grounded metal bodies have been connected to the lightning protection system at only one extremity, the formula shown in 4.15.2.5 or 4.15.2.6 shall be used to determine whether additional bonding is required.

4.15.2.2 Branches of grounded metal bodies connected to the lightning protection system at their extremities shall require bonding to the lightning protection system in accordance with the formula shown in 4.15.2.5 or 4.15.2.6 if they change vertical direction by more than 12 ft (3.6 m).

4.15.2.3 Grounded metal bodies shall not require additional bonding if the measured dc resistance between the inherently bonded, electrically conductive materials and the nearest lightning protection component is less than 200 milliohms.

4.15.2.4 Grounded metal bodies that maintain a separation distance from the lightning protection system components that is greater than the distance calculated using the bonding distance formulas in 4.15.2.5 or 4.15.2.6 shall be considered isolated and require no further bonding except for that required by Sections 4.13 and 4.14.

4.15.2.5 Structures More Than 40 ft (12 m) in Height.

4.15.2.5.1 Grounded metal bodies shall be bonded to the lightning protection system where located within a calculated bonding distance, *D*, as determined by the following formula:

[4.15.2.5.1]

$$D = \frac{h}{6n} \times K_m$$

where:

D = calculated bonding distance

h = vertical distance between the bond under consideration and the nearest interconnection to the lightning protection system or ground

n = value related to the number of down conductors that are spaced at least 25 ft (7.6 m) apart, located within a zone of 100 ft (30 m) from the bond in question and where bonding is required within 60 ft (18 m) from the top of any structure

K_m = 1 if the flashover is through air; 0.50 if through dense material such as concrete, brick, wood, and so forth

4.15.2.5.2 The value n shall be calculated as follows: $n = 1$ where there is only one down conductor in this zone; $n = 1.5$ where there are only two down conductors in this zone; $n = 2.25$ where there are three or more down conductors in this zone.

4.15.2.5.3 Where bonding is required below a level 60 ft (18 m) from the top of a structure, n shall be the total number of down conductors in the lightning protection system.

Documents 2023 Edition Document Sharing Hub

Full document details: NFPA 780 2023

4.15.2.6 Structures 40 ft (12 m) or Less in Height.

4.15.2.6.1 Grounded metal bodies shall be bonded to the lightning protection system where located within a calculated bonding distance, *D*, as determined by the following formula:

[4.15.2.6.1]

$$D = \frac{h}{6n} \times K_m$$

where:

D = calculated bonding distance

h = either the height of the building or the vertical distance from the nearest bonding connection from the grounded metal body to the lightning protection system and the point on the down conductor where the bonding connection is being considered

n = value related to the number of down conductors that are spaced at least 25 ft (7.6 m) apart and located within a zone of 100 ft (30 m) from the bond in question

K_m = 1 if the flashover is through air; 0.50 if through dense material such as concrete, brick, wood, and so forth

4.15.2.6.2 The value *n* shall be calculated as follows: $n = 1$ where there is only one down conductor in this zone; $n = 1.5$ where there are only two down conductors in this zone; $n = 2.25$ where there are three or more down conductors in this zone.

4.15.3 Long Horizontal Metal Bodies on Roofs. Long horizontal grounded metal bodies on roofs shall be bonded in accordance with 4.15.3.1 through 4.15.3.3.

4.15.3.1 Grounded metal bodies on roofs exceeding 60 ft (18 m) in horizontal length shall be bonded to the lightning protection system as near as practicable to their extremities unless inherently bonded through construction at those locations.

Δ **4.15.3.2** Horizontal grounded metal bodies that are parallel to a main lightning conductor and within the bonding distance calculated in 4.15.2.5 or 4.15.2.6 shall be bonded to the main conductor at intervals averaging not more than 100 ft (30 m) along the main conductor unless inherently bonded through construction at those locations.

4.15.3.3 Horizontal grounded metal bodies that cross a main conductor shall be bonded to the main conductor where they cross the conductor unless inherently bonded through construction at that location.

4.15.4* Ungrounded Metallic Bodies.

4.15.4.1 The effect due to ungrounded metallic bodies shall be determined by using Figure 4.15.4.1 according to either 4.15.4.1.1 or 4.15.4.1.2.

4.15.4.1.1 If $a + b$ is less than the calculated bonding distance, then *A* shall be bonded to *B* directly.

4.15.4.1.2 If $a + b$ is greater than the calculated bonding distance, bonds shall not be required.

4.15.4.2 A bonding connection shall be required where the total of the shortest distance between the lightning conductor and the ungrounded metal body and the shortest distance between the ungrounded metal body and the grounded metal body is equal to or less than the bonding distance as calculated in accordance with 4.15.2.

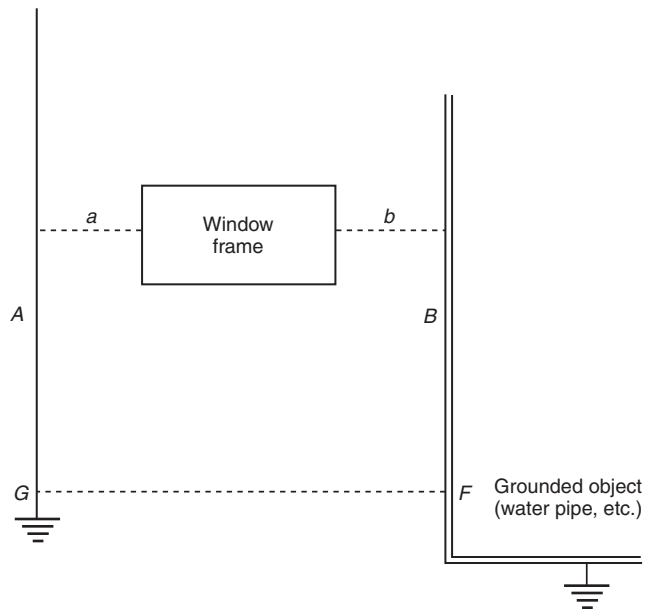

FIGURE 4.15.4.1 Effect of Ungrounded Metallic Bodies, Such as a Window Frame, in Nonconductive Media.

4.15.4.3 Bonding connections shall be made between the lightning protection system and the grounded metal body.

4.15.4.3.1 The bonding connection shall be permitted to be made directly to the grounded metal body.

4.15.4.3.2 The bonding connection shall be permitted to be made from the lightning protection system to the ungrounded metal body and from the ungrounded metal body to the grounded metal body.

Δ **4.15.5 Materials.**

N **4.15.5.1** Conductors used for the bonding of grounded or ungrounded metal bodies requiring connection to the lightning protection system shall be sized in accordance with the bonding conductor requirements in Table 4.1.1.1.1 and Table 4.1.1.1.2.

N **4.15.5.2** Connectors for equipotential bonding shall have a minimum surface contact area of 0.021 in^2 (0.133 cm^2) for copper and 0.032 in^2 (0.208 cm^2) for aluminum.

4.16* Metal Antenna Masts and Supports. Metal antenna masts or supports located on a protected structure shall be connected to the lightning protection system using main-size conductors and listed fittings and connectors unless they are within a zone of protection.

4.17 Concealed Systems.

4.17.1 General.

4.17.1.1 Requirements covering exposed systems also shall apply to concealed systems, except conductors shall be permitted to be coursed under roofing materials, under roof framing,

AVA Documents Document Sharing Hub
Full document details: NFPA 780 2023

behind exterior wall facing, between wall studding, in conduit chases, or embedded directly in concrete or masonry construction.

4.17.1.2 Where a conductor is run in metal conduit, it shall be bonded to the conduit at the point where it enters the conduit, at the point where it emerges from the conduit, and at all locations where the conduit is not electrically continuous.

4.17.2 Masonry Chimneys. Chimney strike termination devices and conductors shall be permitted to be concealed within masonry chimneys or to be attached to the exterior of masonry chimneys and routed through the structure to concealed main conductors.

4.17.3 Concealment in Steel-Reinforced Concrete. Conductors or other components of the lightning protection system concealed in steel-reinforced concrete units shall be connected to the reinforcing steel.

4.17.3.1 Concealed down conductors shall be connected to the vertical reinforcing steel in accordance with 4.8.13.

4.17.3.2 Roof conductors or other concealed horizontal conductor runs shall be connected to the reinforcing steel at intervals not exceeding 100 ft (30 m).

4.17.4 Grounding Electrodes. Grounding electrodes for concealed systems shall comply with Section 4.12.

4.18 Structural Metallic Systems.

4.18.1 General. The metal framework of a structure shall be permitted to be utilized as the main conductor of a lightning protection system if it is equal to or greater than 3/16 in. (4.8 mm) in thickness and is electrically continuous, or it is made electrically continuous by methods specified in 4.18.3.

4.18.2 Strike Termination Devices.

4.18.2.1 Strike termination devices shall be connected to the structural metal framing by direct connection, by use of individual conductors routed through the roof or parapet walls to the steel framework, or by use of an exterior conductor that interconnects all strike termination devices and that is connected to the metal framework.

4.18.2.2 Where an exterior conductor is used in lieu of through-roof penetrations for the interconnection of strike termination devices, it shall be connected to the metal framework of the structure as follows:

(1) Conductors along a ridge at intervals not exceeding an average distance of 100 ft (30 m), as widely spaced as practicable and at each end in accordance with Section 4.8
(2) Perimeter roof conductors at intervals not exceeding an average distance of 100 ft (30 m), as widely spaced as practicable and at ends in accordance with Section 4.8
(3) Cross-run conductors at intervals not exceeding a distance of 150 ft (45 m) in lieu of the requirements of 4.8.8

4.18.3 Connections to Framework. Conductors shall be connected to areas of the structural metal framework that have been cleaned to base metal, by use of one of the following methods:

(1) Bonding plates having a surface contact area of not less than 8 in.^{2} (5200 mm^2)
(2) Welding
(3) Brazing
(4) Drilling and tapping

4.18.3.1 Bonding plates shall have bolt-pressure cable connectors and shall be bolted, welded, or brazed to the structural metal framework so as to maintain electrical continuity.

4.18.3.2 A threaded connector drilled and tapped in the metal framework shall be installed with at least five threads fully engaged and secured with a jam nut or equivalent.

4.18.3.3 The threaded portion of the connector shall be not less than ½ in. (12.7 mm) in diameter.

4.18.3.4* Where corrosion-protective paint or coatings are removed as part of the bonding process, the completed electrical connection shall have corrosion protection equivalent to the original coating.

4.18.4 Grounding Electrodes.

4.18.4.1 Grounding electrodes shall be connected to the structural metal framework at intervals around the perimeter averaging not more than 60 ft (18 m).

4.18.4.2 Connections shall be made as close as practicable to the base of the structural metal framework in accordance with the requirements in 4.18.3.

4.18.5 Bonding Connections. Where metal bodies located within a steel-framed structure are inherently bonded to the structure through the construction, separate bonding connections shall not be required.

4.19 Surge Protection.

4.19.1* General. Surge protection shall comply with the following:

(1) Type 1 or Type 2 listed surge-protective devices (SPDs) permanently installed on premises wiring systems operating at 1,000 volts or less in accordance with 4.19.2
(2) Surge arresters permanently installed on circuits, equipment, or systems operating over 1,000 V in accordance with 4.19.3
(3) Listed surge protectors permanently installed for signal, data, and communication systems in accordance with 4.19.4

4.19.2* Surge-Protective Device (SPD) Requirements.

4.19.2.1 SPDs shall be installed at all power services supplying a building, structure, or equipment.

N **4.19.2.1.1** SPDs shall be an integral part of the service equipment or located immediately adjacent thereto.

•

4.19.2.2 SPDs shall be installed at all points of supply where a service, feeder, or branch circuit conductor or cable enters or exits a building or structure to supply another building or structure and where the conductors or cables are run over 100 ft (30 m).

4.19.2.3* SPDs shall be permitted to be installed anywhere on the load side of a service disconnect overcurrent device or at the point of utilization on the load side of a branch circuit overcurrent protection device up to the equipment served; this protection is in addition to that required by 4.19.2.1 and 4.19.2.2.

4.19.2.4* SPDs shall not be required where, under engineering supervision, it is determined that the surge threat is negligi-

AVA Documents 2023 Edition Document Sharing Hub
Full document details: NFPA 780 2023

ble, the lines are equivalently protected, or installation would compromise safety.

•

4.19.2.5 The SPD shall protect against surges produced by a 1.2/50-μs and 8/20-μs combination waveform generator.

4.19.2.6* SPDs at the service entrance shall have a nominal discharge current (I_n) rating of at least 20 kA 8/20 μs per phase.

•

Δ **4.19.2.7*** The published voltage protection rating (VPR) of the SPD for each mode of protection shall be no greater than that given in Table 4.19.2.7 for the different power distribution systems to which they can be connected.

•

Δ **4.19.2.8** The SPD shall be marked with a short-circuit current rating.

N **4.19.2.8.1** The requirement for a short-circuit current rating marking shall not apply to receptacles.

N **4.19.2.8.2** SPDs shall not be installed at a point on the system where the available fault current is in excess of the SPD rating.

4.19.2.9 The maximum continuous operating voltage (MCOV) of the SPD shall be selected to ensure that it is greater than the upper tolerance of the utility power system to which it is connected.

•

N **4.19.2.10** SPDs shall be permitted to be located indoors or outdoors.

N **4.19.2.11** SPDs shall be made inaccessible to unqualified persons unless the SPDs are listed for installation in accessible locations.

N **4.19.2.12*** Where used at a point on a circuit, an SPD shall be connected to each ungrounded conductor.

N **4.19.2.12.1** A surge-protective device shall be permitted to be connected between any two conductors — ungrounded conductors, grounded conductors, equipment grounded conductors, or grounding electrode conductors.

N **4.19.2.12.2** The conductors used to connect the SPD to the line or bus and to ground shall not be any longer than necessary and shall have no unnecessary bends.

4.19.2.13* Earth Grounding Electrode. The resistance of the earth electrode system used in the grounding of SPDs shall comply with *NFPA 70*.

4.19.2.14 Physical Characteristics.

Δ **4.19.2.14.1** SPDs shall be protected with consideration for the operational environment conditions and according to the manufacturer's installation instructions.

4.19.2.14.2* Enclosures shall be marked with environmental rating(s) by type.

N **4.19.3* Surge Arrester Requirements.**

N **4.19.3.1** Surge arresters shall be installed in accordance with 4.19.2.1 and 4.19.2.2 when a building, structure, or equipment operates over 1,000 V.

N **4.19.3.2*** The duty cycle rating of a surge arrester shall be not less than 125 percent of the maximum system voltage available at the point of application.

N **4.19.3.3** Surge arresters shall be permitted to be located indoors or outdoors.

N **4.19.3.4** Surge arresters shall be made inaccessible to unqualified persons unless the surge arresters are listed for installation in accessible locations.

N **4.19.3.5** Where used at a point on a circuit, a surge arrester shall be connected to each ungrounded conductor.

N **4.19.3.5.1** A single installation of surge arresters shall be permitted to protect a number of interconnected circuits if no circuit is exposed to surges while disconnected from the surge arresters.

N **4.19.3.6** The conductor used to connect a surge arrester to a line, bus, or equipment and to an equipment grounding conductor or grounding electrode connection point shall not be any longer than necessary and shall have no unnecessary bends.

N **4.19.3.7** The conductor between the surge arrester and the line and the surge arrester and the grounding connection shall be not smaller than 6 AWG copper or aluminum, or it shall

Table 4.19.2.7 Maximum Allowed Voltage Protection Rating per Mode of Protection Provided for Different Power Distribution Systems to Which the SPD Can Be Connected

Power Distribution System	Line-to-Neutral	Line-to-Ground	Neutral-to-Ground	Line-to-Line
120 2W + ground	700	700	700	—
240 2W + ground	1000	1000	1000	—
120/240 3W + ground	700	700	700	1200
120/208 WYE 4W + ground	700	700	700	1200
277/480 WYE 4W + ground	1200	1200	1200	1800
277/480 WYE 4W + HRG (high-resistance ground)	1200	1800	1200	1800
347/600 WYE 4W + ground	1800	1800	1800	4000
240 DELTA 3W + ground (corner grounded)	—	1000	—	1000
240 DELTA 3W (ungrounded)	—	1000	—	1000
480 DELTA 3W + ground (corner grounded)	—	1800	—	1800
480 DELTA 3W (ungrounded)	—	1800	—	1800

Documents Document Sharing Hub
Full document details: NFPA 780 2023

utilize a conductive material that has a capacity and withstand rating equivalent to at least a 6 AWG conductor.

N **4.19.3.8** A surge arrester protecting a transformer that supplies a secondary distribution system shall be interconnected in accordance with Part III of Article 242 of *NFPA 70 (NEC)*.

N **4.19.4 Surge Protector Requirements.**

N **4.19.4.1*** Surge protectors shall be installed on all signal, data, and communications systems that enter or exit a building or structure or supply equipment, including proprietary equipment from communication utility providers or tenant communication utilities.

4.19.4.1.1 Surge protectors shall not be required if a service provider has made other provisions for lightning surge threats.

N **4.19.4.2*** Surge protectors shall be installed where signal, data, or communications system conductors or cables enter or exit a building or structure to supply another building or structure and where the conductors or cables are run over 100 ft (30 m).

4.19.4.3* Surge protectors shall have a maximum discharge current (I_{max}) rating of at least 10 kA 8/20 μs when installed at the entrance.

Δ **4.19.4.4** The selection of surge protectors shall take into consideration aspects such as frequency, bandwidth, and voltage.

4.19.4.4.1 Losses (such as returns loss, insertion loss, impedance mismatch, or other attenuation) introduced by the surge protector shall be within acceptable operational limits.

N **4.19.4.5*** Surge protectors shall be grounded.

N **4.19.4.5.1** Surge protectors that perform their protection function through isolation shall not be required to be grounded.

Δ **4.19.4.5.2*** Surge protectors that do not perform their surge protection function through isolation shall be grounded in accordance with Chapter 8 of *NFPA 70*.

Δ **4.19.4.6** Where the point of grounding referenced in 4.19.4.5 is more than 20 ft (6 m) away, a supplementary ground reference point shall be installed at the surge protector location.

N **4.19.4.6.1** Supplementary ground reference points shall be permitted as follows:

(1) Equipotential ground bus bar
(2) Structural metal framework in accordance with 4.18.1
(3) Ground reference at a secondary power distribution panel

4.19.4.7 Surge protectors shall not be grounded through a down conductor of the lightning protection system.

4.19.4.8* Surge protectors shall be located and installed so as to minimize lead length, and interconnecting leads shall be routed so as to avoid sharp bends, coils, or kinks.

4.19.4.9 The surge protector grounding conductor, if provided, shall be installed in accordance with the manufacturer's installation instructions.

4.19.4.10* Surge protectors shall be accessible for inspection and maintenance.

4.19.5 Communications Surge Protection.

4.19.5.1 SPDs shall be provided for all communications systems (including, but not limited to, CATV, alarm, and data systems) and antenna systems at facility entrances.

4.19.5.2 SPDs protecting communications systems shall be grounded, with the exception of devices that perform their surge protection function through isolation.

4.19.5.2.1* SPDs for data and signal line protection shall provide common mode protection, with the exception of devices that perform their surge protection function through isolation.

4.19.5.3 Utility-Owned Communication Equipment.

Δ **4.19.5.3.1** SPDs shall be provided on all proprietary equipment by communication utility providers or tenant communication utilities.

4.19.6 Installation.

4.19.6.1 Installation of surge suppression hardware shall conform to the requirements of *NFPA 70*.

Chapter 5 Protection for Miscellaneous Structures and Special Occupancies

5.1 General. All requirements of Chapter 4 shall apply except as modified by this chapter.

5.2 Masts, Spires, Flagpoles.

5.2.1 These slender structures shall require one strike termination device, down conductor, and grounding electrode.

5.2.2 Electrically continuous metal structures shall require only bonding to a grounding electrode or electrodes.

5.3 Facilities That Handle or Process Combustible or Explosive Dust.

5.3.1 Provisions shall be made for grain elevators and other food processing facilities to prevent ignition of combustible dust in accordance with this standard and NFPA 61.

5.3.2 Provisions shall be made for coal and coke processing facilities to prevent ignition of combustible dust in accordance with this standard and NFPA 122.

5.3.3 Provisions shall be made for the settling and rising of wood frame elevators as grain, coal, and coke are loaded and unloaded.

5.3.4 Provisions shall be made for wood working facilities to prevent ignition of combustible dust in accordance with this standard and NFPA 664.

5.4 Metal Towers and Tanks. Metal towers and tanks constructed so as to receive a stroke of lightning without damage shall require only bonding to grounding electrodes as required in Chapter 4, except as provided in Chapter 7.

5.5 Air-Inflated Structures. Air-inflated structures shall be protected with strike termination devices mounted directly on the structure, with a mast-type or a catenary lightning protection system in accordance with Chapter 4.

5.6 Concrete Tanks and Silos. Lightning protection systems for concrete (including prestressed concrete) tanks containing

Documents 2023 Edition Document Sharing Hub
Full document details: NFPA 780 2023

flammable vapors, flammable gases, and liquids that produce flammable vapors and for concrete silos containing materials susceptible to dust explosions shall be provided with either external conductors or with conductors embedded in the concrete in accordance with Chapter 4 or Chapter 7.

5.7 Guyed Structures. Each metal guy cable shall be bonded at its lower end with a main-size conductor to all other guy cables sharing a common anchor point, and grounded at the anchor point.

5.7.1 Anchor plates shall be bonded to the anchor ground point.

5.7.2 Multiple guy cables shall be permitted to be connected to a common point with a single continuous conductor to the ground and the anchor plate bonding conductor attached to that main conductor.

5.7.3 Each metal guy cable shall be bonded at its upper end to the structure it supports if it is constructed of a conductive material, and to the lightning protection system loop conductor or down conductors.

5.8 Rooftop Helipads. Rooftop helipads on a protected structure shall be protected in accordance with Chapter 4 except as permitted by 5.8.1 through 5.8.7.

5.8.1* The metal frame of the structure or the metal frame of the safety net at the perimeter of the pad shall be permitted to serve as a strike termination device.

5.8.2 If adjacent sections of the perimeter metal frame or metal frame of the safety net are not electrically continuous through their mounting system, they shall be connected together with a main-size conductor.

5.8.3 Where lights are installed at the perimeter of the pad and extend above the edge of the helipad, air terminals shall be installed adjacent to the fixture.

5.8.4 The structural metal frame of the helipad shall be connected to the lightning protection system at a minimum of two places in accordance with 4.18.3.

5.8.4.1 Connections shall be installed at intervals not to exceed an average of 100 ft (30 m) around the perimeter of the pad, as widely spaced as practicable.

5.8.4.2 Clamps and conductors shall be installed at or below the elevation of the safety net frame.

5.8.4.3 Clamps and conductors shall be secured against vibration and rotor wash.

5.8.5 All exposed components shall be nonreflective or treated with a nonreflective finish.

5.8.6* Helipads used for parking shall have a designated point to connect the helicopter to the lightning protection system while parked.

5.8.7 All components of the lightning protection and grounding systems shall be located so as not to interfere with helicopter operations.

5.9 Fabric Structures.

5.9.1 Fabric structures shall be protected in accordance with Chapter 4.

5.9.2 If a fabric structure has a metal frame, the metal frame shall be bonded to the lightning protection system.

5.9.3 If the structural metal framing is at least ⅛ in. (3 mm) thick, the framing shall be permitted to be used as main-size conductors.

5.9.4 Grounding systems shall be installed in accordance with Chapter 4 and in accordance with 5.9.4.1 or 5.9.4.2 to mitigate the threat of step potential.

5.9.4.1 All of the following shall be satisfied:

(1) Fabric structures that have a fabric or earth floor shall have a ground loop conductor.
(2) Fabric structures that have electrically continuous metal framing around the perimeter of the structure shall be permitted to be used as the ground loop conductor if it is at least ⅛ in. (3 mm) thick.
(3) Fabric structures that have a fabric or earth floor shall have a minimum of two radial grounding electrodes installed at opposing corners.
(4) Fabric structures that have a fabric or earth floor shall have one radial electrode for every 60 ft (18 m) of protected perimeter, of portion thereof, in accordance with 4.18.4.1.

5.9.4.2* A ground grid shall be installed under fabric structures with an earth or fabric floor.

5.9.4.3 Isolation techniques such as insulative floors, insulative mats, or other technologies to reduce the threat of step potential shall be permitted.

Chapter 6 Protection for Heavy-Duty Stacks

6.1 General. A smoke or vent stack as shown in Figure 6.1 shall be classified as heavy duty if the cross-sectional area of the flue is greater than 500 in.^{2} (0.3 m^2) and the height is greater than 75 ft (23 m) above grade level.

6.2 Materials.

6.2.1 General. Materials shall be Class II as shown in Table 4.1.1.1.2 and as described in this chapter.

6.2.2 Corrosion Protection. Copper and bronze materials used on the upper 25 ft (7.6 m) of a stack shall have a continuous covering of lead having a minimum thickness of 0.064 in. (1.63 mm) to resist corrosion by flue gases.

6.2.2.1 Such materials shall include conductors, strike termination devices, connectors, splicers, and cable holders.

6.2.2.2 Stacks that extend through a roof less than 25 ft (7.6 m) shall have a lead covering only on those materials above the roof level.

6.3 Strike Termination Devices. Strike termination devices shall be made of solid copper, stainless steel, titanium, or Monel® metal.

6.3.1 They shall be located uniformly around the top of cylindrical stacks at intervals not exceeding 8 ft (2.4 m).

6.3.2 On square or rectangular stacks, strike termination devices shall be located not more than 24 in. (600 mm) from the corners and shall be spaced not more than 8 ft (2.4 m) apart around the perimeter.

AVA Documents Document Sharing Hub
Full document details: NFPA 780 2023

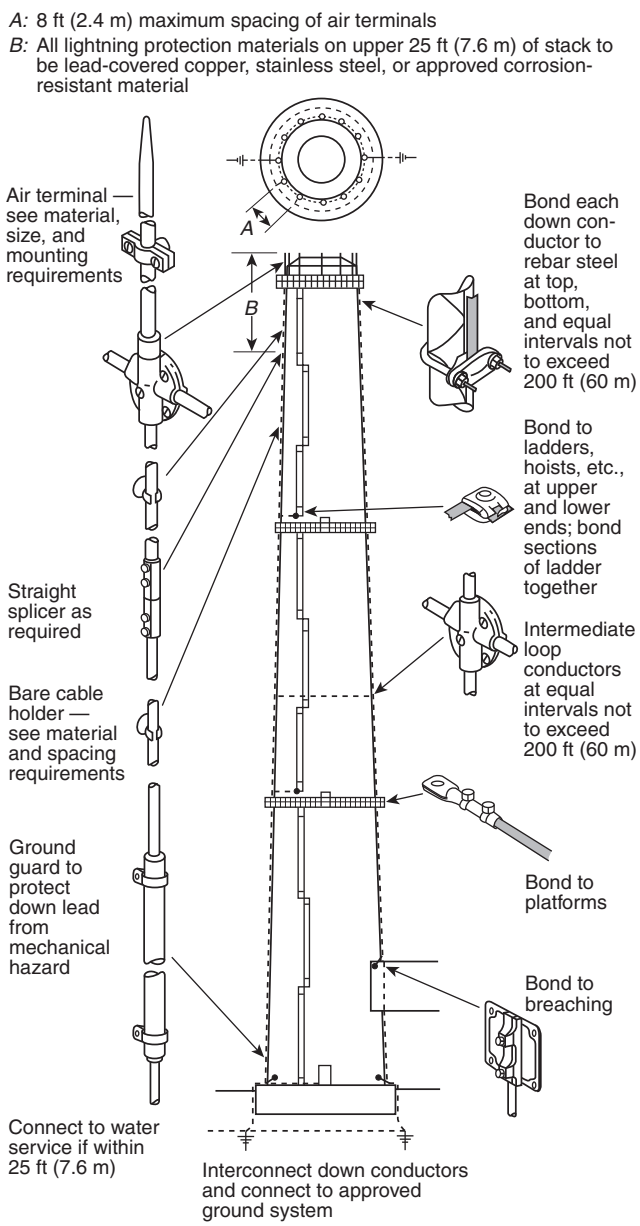

FIGURE 6.1 Heavy-Duty Stack.

6.3.3 Air Terminal Heights. The height of air terminals above the stacks shall be not less than 18 in. (450 mm) or more than 30 in. (760 mm).

6.3.3.1 Strike termination devices shall be at least ⅝ in. (15 mm) in diameter, exclusive of the corrosion protection.

6.3.3.2 Top-mounted air terminals shall not extend more than 18 in. (450 mm) above the top of the stack.

6.3.4 Air Terminal Mountings.

6.3.4.1 Air terminals shall be secured to the stack and shall be connected together at their lower end with a conductor forming a closed loop around the stack.

6.3.4.2 Side-mounted air terminals shall be secured to the stack at not less than two locations.

6.3.4.3 An anchored base connector shall be considered as one location.

6.3.5 Steel Hoods.

6.3.5.1 An electrically continuous steel hood covering the stack lining and column, having a metal thickness of not less than 3⁄16 in. (4.8 mm), shall be permitted to serve as the strike termination device.

6.3.5.2 The hood shall be permitted to serve as a top loop conductor when connected to each down conductor using a connection plate with an area of not less than 8 in.^{2} (5200 mm^2) bolted or welded to the hood.

6.4 Conductors.

6.4.1 General.

6.4.1.1 Conductors shall be copper, weighing not less than 375 lb per 1000 ft (558 g per m) without the lead coating, or approved corrosion-resistant material or coating.

6.4.1.2 The size of any wire in the conductor shall be not less than 15 AWG.

6.4.2 Down Conductors.

6.4.2.1 No fewer than two down conductors shall be provided.

6.4.2.2 Down conductors shall be as equally spaced as practicable around the stack.

6.4.2.3 Down conductors shall lead from the loop conductor at the top to grounding electrodes.

6.4.2.4 Down conductors shall be interconnected within 12 ft (3.6 m) of the base by a loop conductor, preferably below grade.

6.4.2.5 The down conductor also shall be interconnected with a loop conductor at intervals not exceeding 200 ft (60 m).

6.4.2.6 Down conductors shall be protected from physical damage or displacement for a distance of not less than 8 ft (2.4 m) above grade.

6.5 Fasteners.

6.5.1 Fasteners shall be of copper, bronze, or stainless steel.

6.5.2 Fasteners shall be anchored to the stack by masonry anchors or lay-in attachments.

6.5.3 The threaded shank of fasteners shall be not less than ½ in. (12.7 mm) diameter for air terminals and ⅜ in. (10 mm) diameter for conductors.

6.5.4 Vertical conductors shall be fastened at intervals not exceeding 4 ft (1.2 m).

6.5.5 Horizontal conductors shall be fastened at intervals not exceeding 24 in. (600 mm).

6.6 Splices.

6.6.1 Splices in conductors shall be as few as practicable.

6.6.2 Splices in conductors shall be attached so as to withstand a pull test of 200 lb (890 N).

6.6.3 All connections and splices shall be by bolting, brazing, welding, or high-compression connectors listed for the purpose.

Documents 2023 Edition Document Sharing Hub
Full document details: NFPA 780 2023