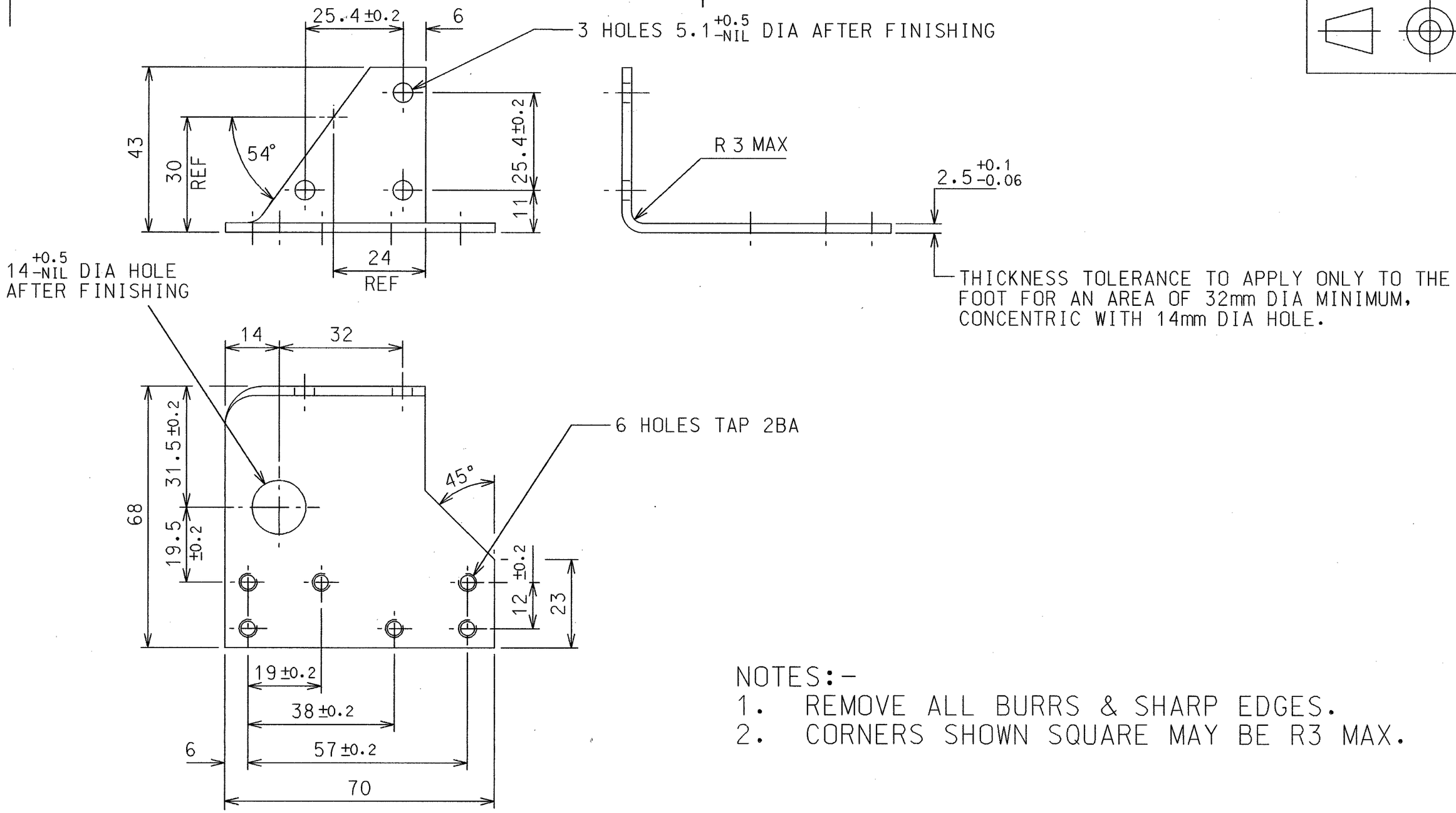

NOTES:-

1. REMOVE ALL BURRS & SHARP EDGES.
2. CORNERS SHOWN SQUARE MAY BE R3 MAX.

Revisions
E (CRN 0043) 7-6-96
REDRAWN ON CAD
HOLES & 19 & 38
CENTRES ADDED.

DAJR	FP	

Produced for Railway Group Standards by :
Opal Engineering
Mechanical Engineering Services & Design

DRAWN	DATE	CHECKED	DATE
JER	11-8-87	AL	11-8-87

DO NOT SCALE. DRAWN TO BS 308A IF IN DOUBT ASK
TOLERANCES ARE ±1.0 EXCEPT WHERE STATED OTHERWISE
ALL DIMENSIONS ARE IN MILLIMETERS

MATERIAL:
STEEL TO BS1449
HR15

FINISH:
EZP & PASSIVATE
TO BS1706 CLASS B

CAT. No. 86/032321

ORIGINAL SCALE 1/1

Railway Group Standards RAILTRACK

DOCUMENTREF

EQUIPMENT CODE

DISTRIBUTION CODE

This document is the property of Railtrack. It shall not be reproduced in whole or in part, nor disclosed to any third party, without the written permission of the Controller, Safety Standards.
© Copyright Railtrack 1996 Published by Railway Group Standards

RAIL CLAMP POINT LOCK MK2
SWITCH BRACKET
RIGHT HAND
FOR SWITCH ASSY WITH VERTICAL TERMINATION BLOCKS

Signed for Railway Group Standards
ISSUE DATE:

DRG No.
BRS-SM2204/6

E

A3 SHEET.DGN

Copyright Network Rail
Provided by IHS under license with Network Rail
No reproduction or networking permitted without license from IHS
Full document details: NR BRS-SM2204-6 ISSUE E 1996
Licensee: Weston Williamson 5989497001, User: sam, albert
Not for Resale, 03/28/2016 01:51:43 MDT
IHS Documents Document Sharing Hub

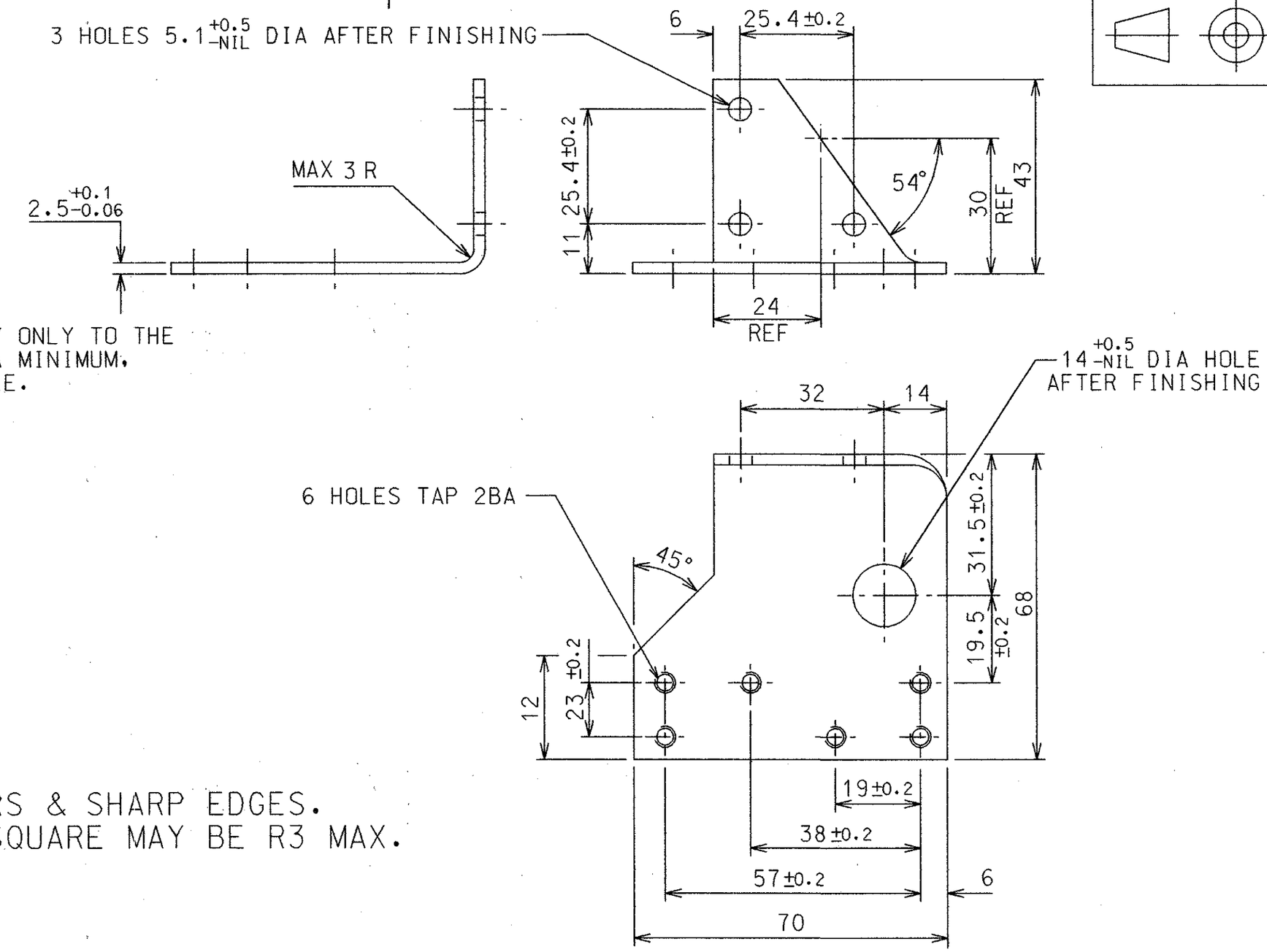

THICKNESS TOLERANCE TO APPLY ONLY TO THE FOOT FOR AN AREA OF 32mm DIA MINIMUM, CONCENTRIC WITH 14mm DIA HOLE.

NOTES:-

1. REMOVE ALL BURRS & SHARP EDGES.
2. CORNERS SHOWN SQUARE MAY BE R3 MAX.

Revisions
E (CRN 0043) 7-6-96
REDRAWN ON CAD
HOLES & 19 & 38
CENTRES ADDED.

DAJR	FP	

Produced for Railway Group Standards by :
Opal Engineering
Mechanical Engineering Services & Design

DRAWN	DATE	CHECKED	DATE
JER	11-8-87	AL	11-8-87

DO NOT SCALE. DRAWN TO BS 308A IF IN DOUBT ASK
TOLERANCES ARE ±1.0 EXCEPT WHERE STATED OTHERWISE
ALL DIMENSIONS ARE IN MILLIMETERS

MATERIAL: STEEL TO BS1449 HR15

FINISH: EZP & PASSIVATE TO BS1706 CLASS B

CAT. No. 86/032322

ORIGINAL SCALE 1/1

Railway Group Standards RAILTRACK

DOCUMENTREF

EQUIPMENT CODE

DISTRIBUTION CODE

This document is the property of Railtrack. It shall not be reproduced in whole or in part, nor disclosed to any third party, without the written permission of the Controller, Safety Standards.
© Copyright Railtrack 1996
Published by Railway Group Standards

RAIL CLAMP POINT LOCK MK2
SWITCH BRACKET
LEFT HAND
FOR SWITCH ASSY WITH VERTICAL TERMINATION BLOCKS

Signed for Railway Group Standards
ISSUE DATE:

DRG Nº
BRS-SM2204/7

Copyright Network Rail
Provided by IHS under license with Network Rail
No reproduction or networking permitted without license from IHS
Full document details: NR BRS-SM 2204-6 ISSUE E 1996
Licensee=Weston Williamson/5989497001, User=sam, albett
Not for Resale, 03/28/2016 01:51:43 MDT
Documents
Document Sharing Hub