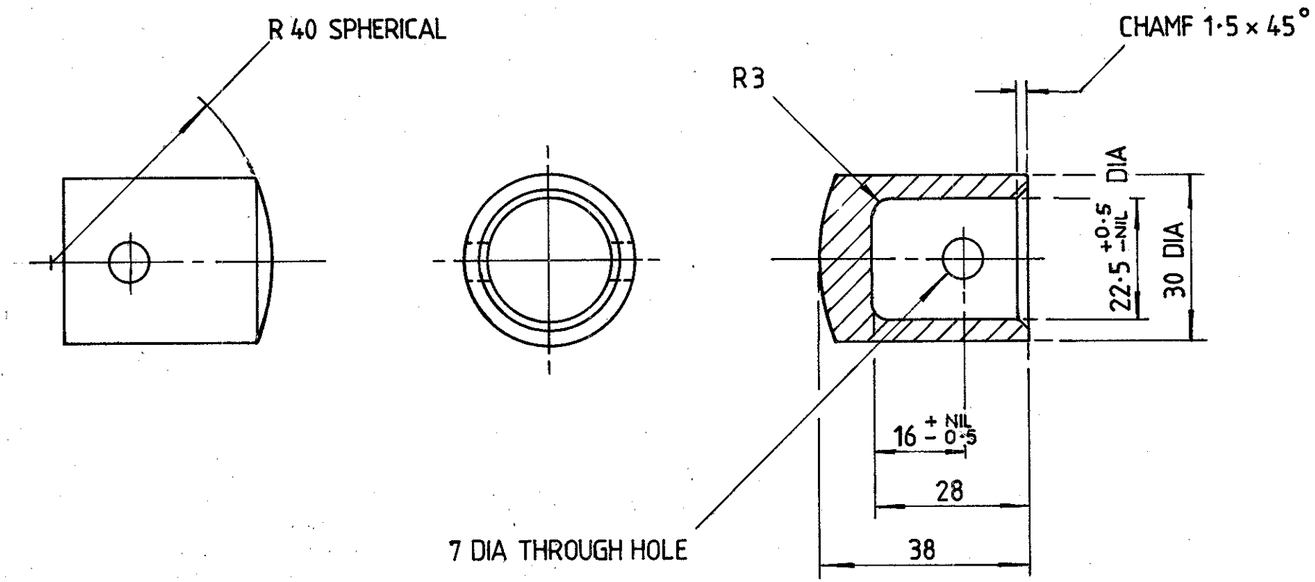

Revisions

ALL DIMENSIONS ARE IN MILLIMETRES.
LIMITS ±0·5 UNLESS STATED.

NYLON GRADE 66, NATURAL

1/1	JER	78	15-2-94
	SK 912	86/33013	

British Railways Board
Signal and Telecommunications Engineering

BACKDRIVE & DETECTION
FOR SWING NOSE CROSSING
ACTUATOR CAP

British Rail

Group Standards 17.05.94

No
BRS-SM2315/6

Copyright Network Rail
Provided by IHS under license with Network Rail
No reproduction or networking permitted without license from IHS
Full document details: NR BRS-SM 2315-6 1994
Licensee=Weston Williamson 5989497001, User=sam, albett
Not for Resale, 03/28/2016 02:10:40 MDT
AVA Documents
Document Sharing Hub

REMOVE ALL SHARP EDGES AND CORNERS

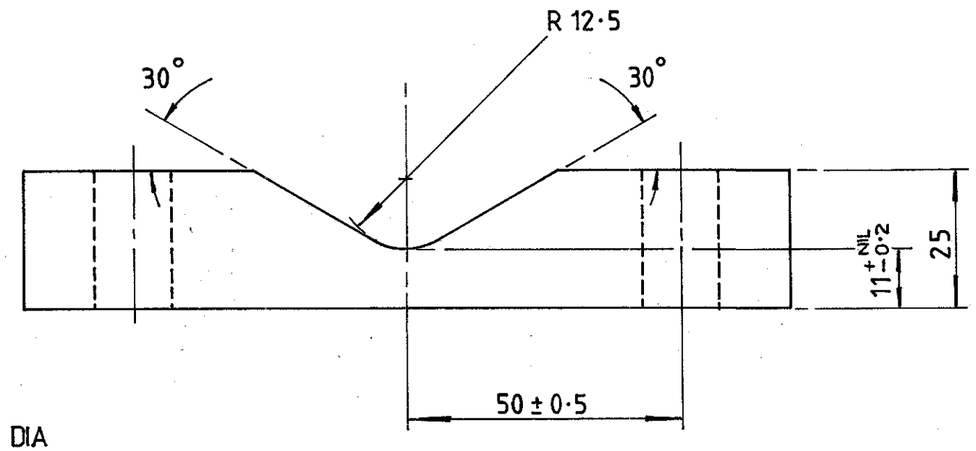

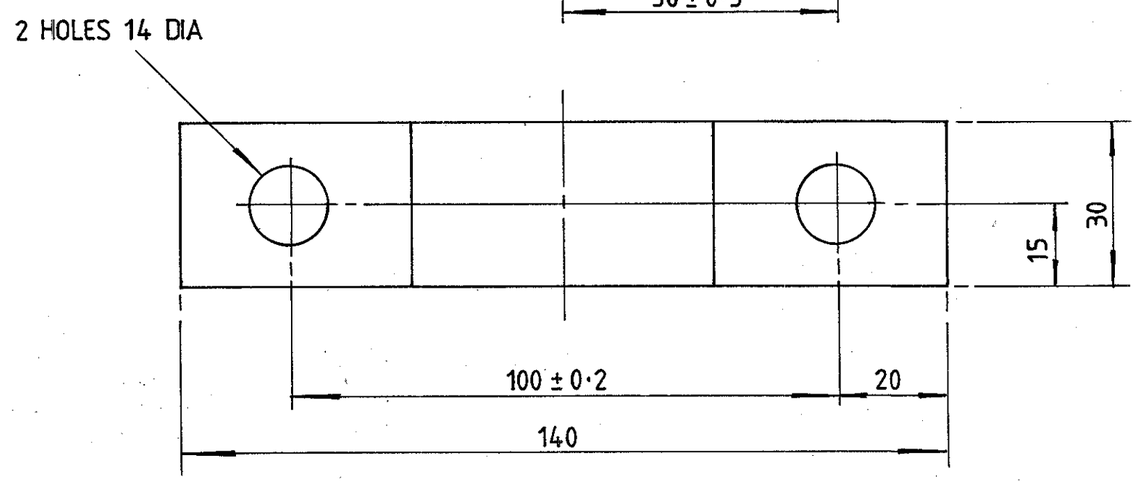

ALTERNATIVELY, STEEL TO BS 970 : 080 A 15
MAY BE USED.

Revisions	ALL DIMENSIONS ARE IN MILLIMETRES. LIMITS ±1 UNLESS STATED.	British Railways Board Signal and Telecommunications Engineering	British Rail
	STEEL TO BS 970 : 070 M 20 / EZP & PASSIVATED TO BS1706	BACKDRIVE & DETECTION FOR SWING NOSE CROSSING VEE BLOCK	Group Standards 17-05-94
	1/1 JER 15-2-94 SK 012		No BRS-SM 2315/2

Copyright Network Rail
Provided by IHS under license with Network Rail
No reproduction or networking permitted without license from IHS
Full document details: NR BRS-SM 2315-6 1994
Licensee=Virgin Media/5989497001, User=sam, albett
Not for Resale, 03/28/2016 02:10:40 MDT
Documents
Document Sharing Hub