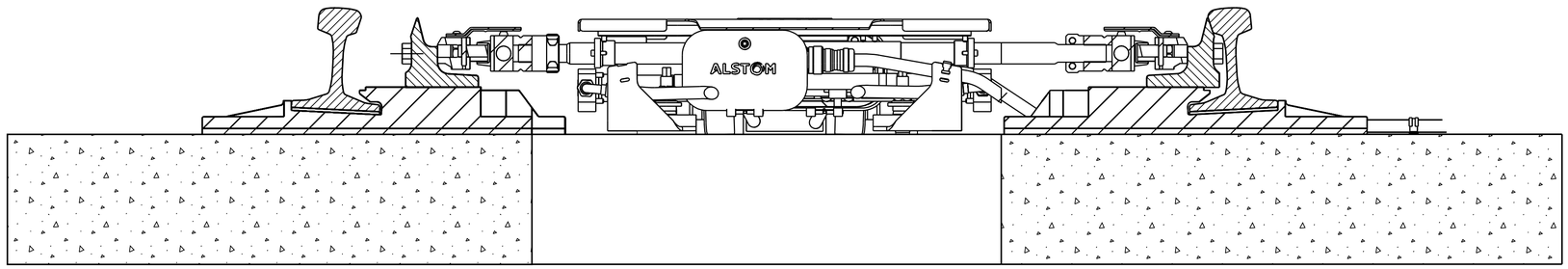

SECTION A - A
SCALE 1 : 5

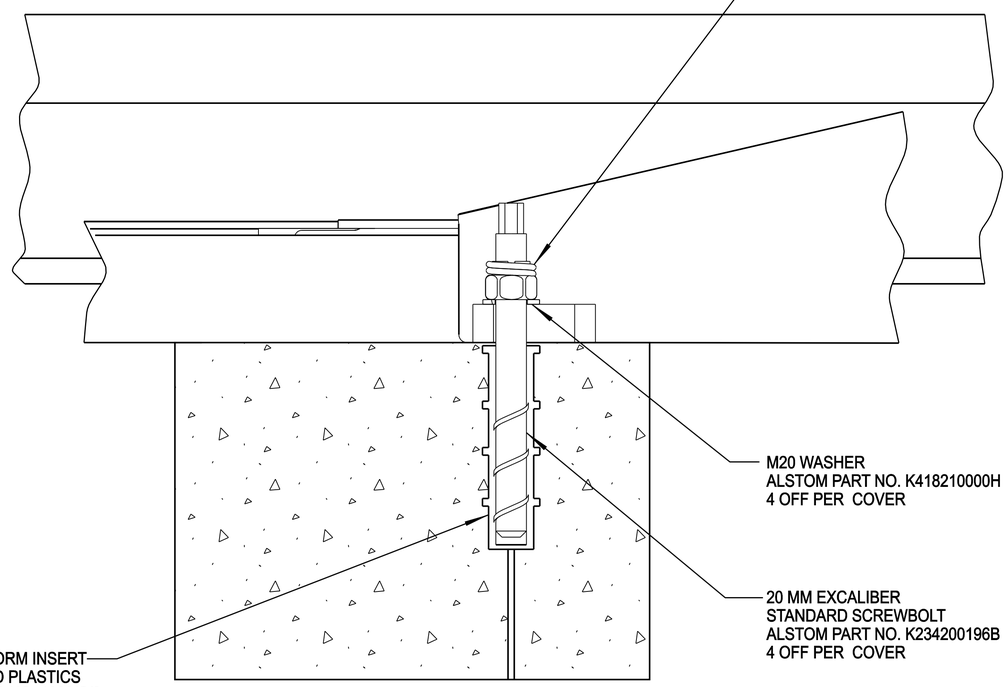

SECTION B - B
SHOWING METHOD OF
FIXING ACTUATOR (& STRETCHER BAR) COVER
SCALE 1 : 5

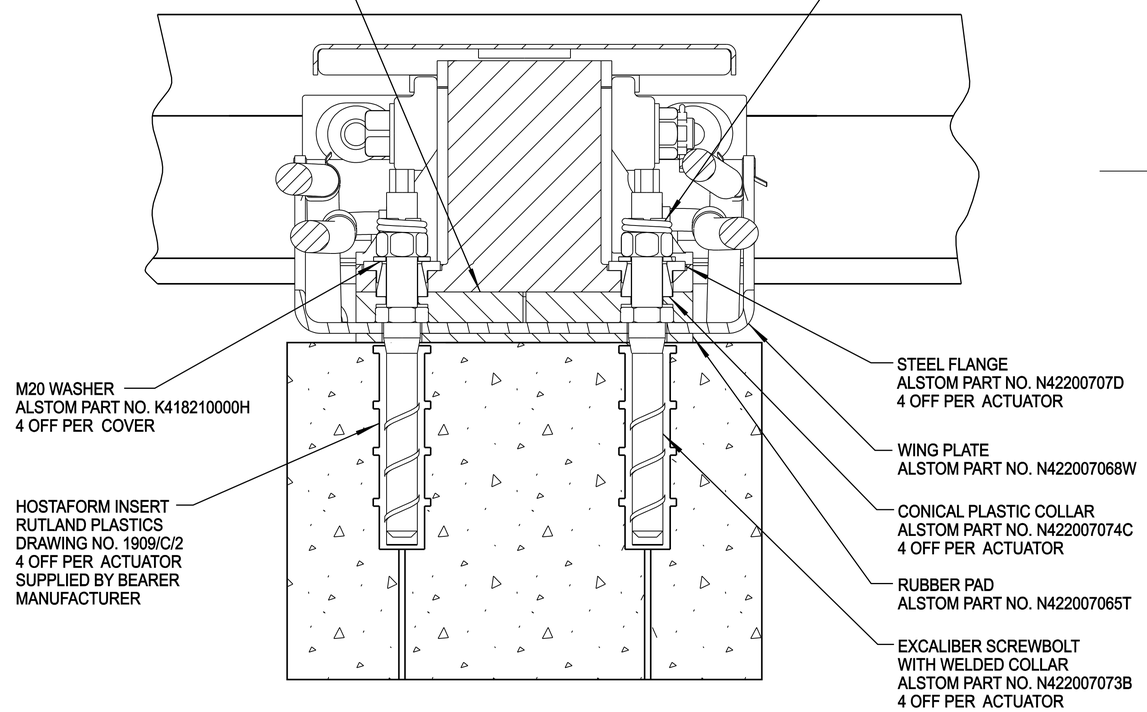

SECTION C - C
SHOWING FIXINGS
FOR SO DRIVE UNIT
SCALE 1:5

REVISIONS

TOLERANCES (UNLESS STATED OTHERWISE IN THE DRAWING OR NOTES)

GENERAL DIMENSIONAL TOLERANCES TO BE

Range of linear dimension	Over	Nil	6	18	50	100	300	1000
	Up to	6	18	50	100	300	1000	5000
Max permissible tolerance		± 0.10	± 0.15	± 0.20	± 0.30	± 0.50	± 1.00	± 2.00

Range of angular dimension	Over	Nil	33°	75°	150°
	Up to	33°	75°	150°	350°
Max permissible tolerance		±2°	±1°	±30'	±15'

GEOMETRIC TOLERANCING SYMBOLS

—	Straightness	⌭	Cylindricity	◎	Concentricity
⏥	Flatness	⫽	Parallelism	⌯	Symmetry
○	Circularity	⊥	Perpendicularity	⌒	Profile of any line
⌓	Profile of any surface	/	Simple Runout	∠	Angularity
		//	Total Runout	⌖	Position

Item used on drg:

General Notes:
1. DO NOT SCALE FROM DRAWING
2. DIMENSIONS ARE IN MILLIMETRES UNLESS OTHERWISE STATED
3. REMOVE ALL SHARP EDGES AND BURRS
4. OUTSIDE CORNERS TO BE 0.5 x 45 DEGREES MAX UNLESS STATED
5. INSIDE CORNERS TO BE R1.5 UNLESS STATED
6. SCREW THREAD TOLERANCES TO BE: INTERNAL 6H, EXTERNAL 6G UNLESS STATED
7. WELDING SYMBOLS TO BS EN 22553
8. CAD DRAWING DO NOT ALTER BY HAND
9. IF IN DOUBT, ASK. REPORT ANY ERRORS

Material:

Finish:

Mass:

Cat No:

Drawn by	PRG	Date
Checked by		06/02/2007
Authorised by	[Master copy signed by A. Simmons] Andrew Simmons Head of Signal Engineering	
Date	07/02/2007	
Authorising Sigcom Minute	DRAWING APPROVED BY PROFESSIONAL CHECK NOT BY COMMITTEE	

Network Rail
40 Melton Street
London NW1 2EE
Tel No: 020 7557 8000
©Copyright Network Rail 2007

Original Scale	SEE ABOVE
Sheet	1 of 3

STANDARD SIGNALLING DRAWING

HY-DRIVE POINT LAYOUT

NR60 LAYOUTS DETAILS AND SECTIONS

Drawing Number: BRS-SM 3011

Rev: --

Size: A0 (1189x841)

Copyright Network Rail
Provided under licence with Network Rail
No part may be reproduced without license from IHS
Licensee=Hexion Williamsburg/5989470/L, User=sam, albert
No Resale, 03/28/2016 00:10:15 MDT
Click to view the terms and conditions of this license
BRS-SM 3011 Issue 1 2007
Filename: NR BRS-SM 3011 ISSUE 1 2007
Documents
Document Sharing Hub

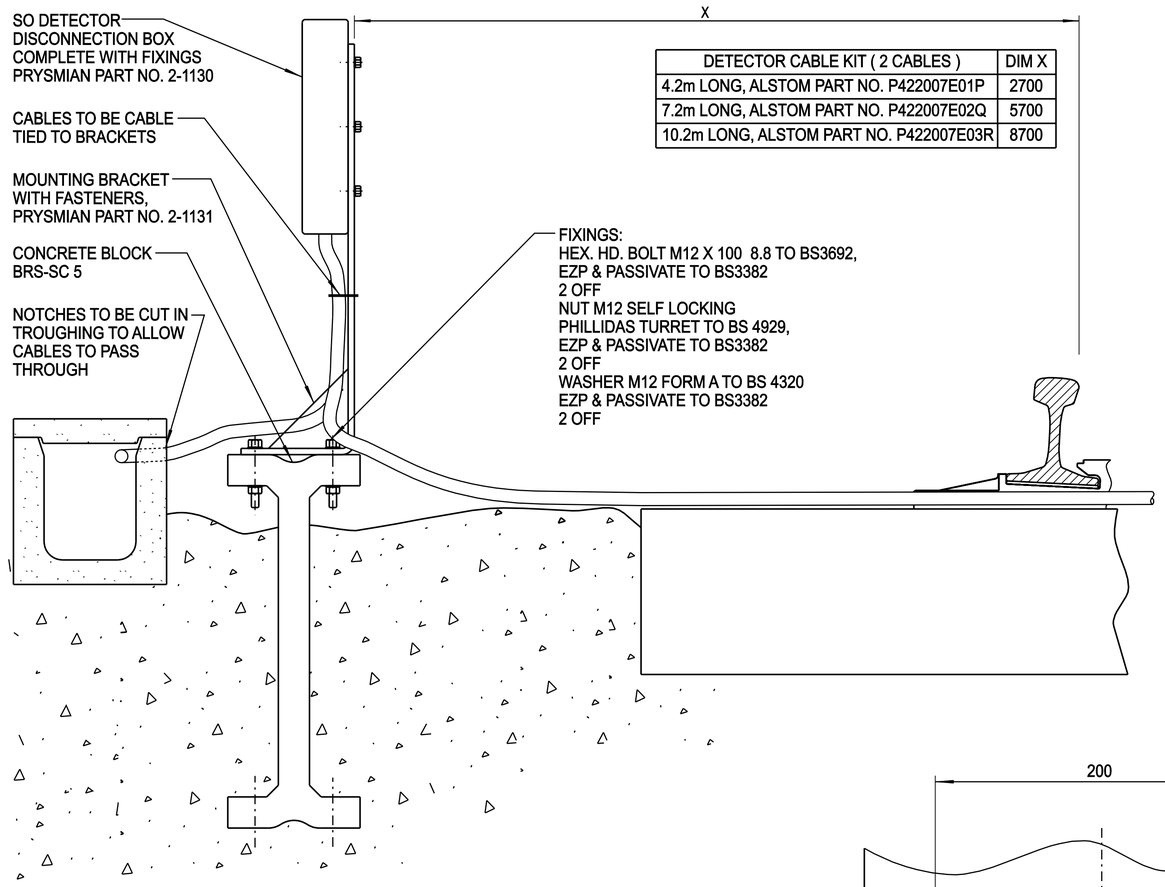

DETECTOR CABLE KIT (2 CABLES)	DIM X
4.2m LONG, ALSTOM PART NO. P422007E01P	2700
7.2m LONG, ALSTOM PART NO. P422007E02Q	5700
10.2m LONG, ALSTOM PART NO. P422007E03R	8700

SIDE VIEW OF TERMINATION BOX
SHOWING FIXINGS
SCALE 1 : 5

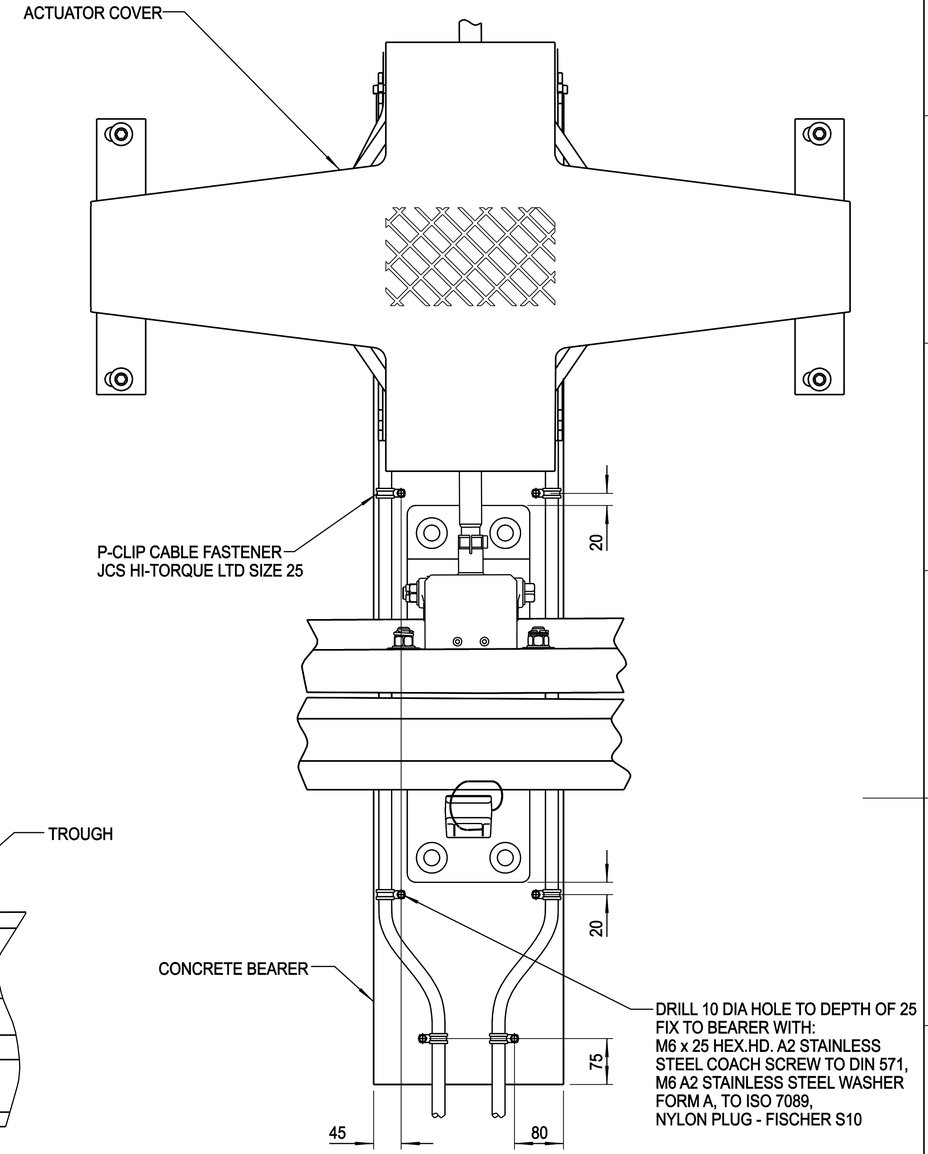

DETAIL OF CABLE FIXING
SCALE 1:5

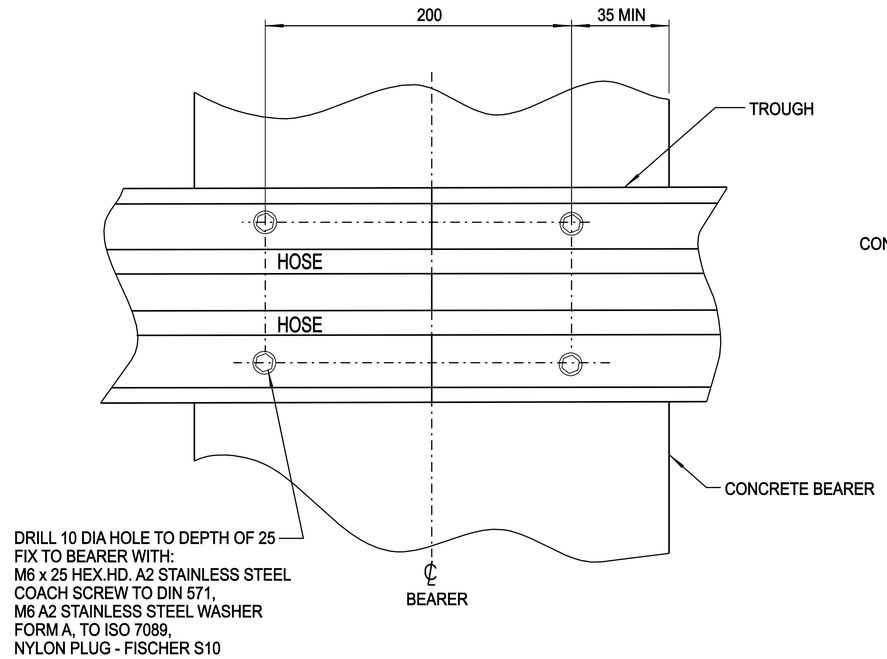

DETAIL OF TROUGHING FIXINGS
SCALE 1:2

FITTING OF POINT IDENTIFICATION BASEPLATE, BRS-SM 2361

TO BE FIXED IN POSITION ON CONCRETE BEARER ADJACENT TO THE NORMALLY CLOSED POINT END, USING LOCTITE MULTIBOND ADHESIVE AS FOLLOWS:

1. REMOVE ANY FOREIGN PARTICLES AND GREASE / OIL FROM THE CONCRETE SURFACE WITH THE AID OF A BRUSH IF NECESSARY.
2. POSITION THE PLATE ON THE CONCRETE BEARER AND MARK ROUND IT.
3. APPLY A CONTINUOUS BEAD OF 'LOCTITE 738' ACTIVATOR AT APPROX. 10 mm INSIDE THE MARKED BOUNDARYON THE BEARER WHERE THE PLATE IS TO BE POSITIONED. THEN COVER THE ENCLOSED AREA WITH FURTHER BEADS OF ACTIVATOR, APPROX. 25mm APART.
4. APPLY 'LOCTITE 330' ADHESIVE TO UNDERSIDE OF MOUNTING PLATE IN A SIMILAR MANNER.
5. BRING THE 2 SURFACES TOGETHER WITH A FIRM EVEN PRESSURE TO PROMOTE BONDING. CURING WILL COMPLETE IN 60 SECONDS.

REVISIONS

TOLERANCES (UNLESS STATED OTHERWISE IN THE DRAWING OR NOTES)

GENERAL DIMENSIONAL TOLERANCES TO BE

Range of linear dimension	Over	Nil	6	18	50	100	300	1000	2000
	Up to	6	18	50	100	300	1000	2000	4000
Max permissible tolerance		± 0.10	± 0.15	± 0.20	± 0.30	± 0.50	± 1.00	± 1.50	± 2.00

Range of angular dimension	Over	Nil	25°	75°	150°
	Up to	25°	75°	150°	250°
Max permissible tolerance		±2°	±1°	±30'	±15'

GEOMETRIC TOLERANCING SYMBOLS

—	Straightness	⌭	Cylindricity	◎	Concentricity
⏥	Flatness	⌯	Parallelism	⌯	Symmetry
○	Circularity	⊥	Perpendicularity	⌒	Profile of any line
⌓	Profile of any surface	/	Simple Runout	∠	Angularity
		//	Total Runout	⌖	Position

Item used on drg:
BRS-SM 3002-3008

General Notes:
1. DO NOT SCALE FROM DRAWING
2. DIMENSIONS ARE IN MILLIMETRES UNLESS OTHERWISE STATED
3. REMOVE ALL SHARP EDGES AND BURRS
4. OUTSIDE CORNERS TO BE 0.5 x 45 DEGREES MAX UNLESS STATED
5. INSIDE CORNERS TO BE R1.5 UNLESS STATED
6. SCREW THREAD TOLERANCES TO BE: INTERNAL 6H, EXTERNAL 6G UNLESS STATED
7. WELDING SYMBOLS TO BS EN 22553
8. CAD DRAWING DO NOT ALTER BY HAND
9. IF IN DOUBT, ASK. REPORT ANY ERRORS

Material:
Finish:
Mass:
Cat No:

Drawn by	PRG	Date
Checked by		06/02/2007
Authorised by	[Master copy signed by A. Simmons] Andrew Simmons Head of Signal Engineering	
Date	07/02/2007	
Authorising Sigcom Minute	CHANGES APPROVED BY SIGNAL STANDARDS NOT BY COMMITTEE	

Network Rail
40 Melton Street
London NW1 2EE
Tel No: 020 7557 8000
©Copyright Network Rail 2007

Original Scale: SEE ABOVE
Sheet: 2 of 3

STANDARD SIGNALLING DRAWING

HY-DRIVE POINT LAYOUT
NR60 LAYOUTS
DETAILS AND SECTIONS

Drawing Number: BRS-SM 3011
Rev: -

Size: A1 (841x594)

Copyright Network Rail
Provided to HS under license with Network Rail
No unauthorised reproduction permitted without license from IHS
File Name: BRS-SM 3011_01.dwg
Product Details: NR BRS-SM 3011 ISSUE 1 2007
Licensee=Hinson Williamson/5989671001, User=sam, albert
No Net Resale, 03/28/2016 00:10:15 MDT
Documents Document Sharing Hub