Supplementary Information

The following information is associated with Network Rail Standard:
NR CIV/SD/1002 Rev C

Additional Content Access

Click the link below to access CAD version of this drawing.

CAD Drawing

- CIV/SD/1002

If you have any questions, or need assistance, please contact **IHS Support**

Information accessed via the links above is the property of the Copyright holder

IHS Additional Content Page

--`,,,,,,`,,,,,,`,,`,,,,,,,,`-`-`,,`,,`,`,,`---

Documents
Document Sharing Hub

Copyright Network Rail
Provided by IHS under license with Network Rail
No reproduction or networking permitted without license from IHS
Full document details: NR NR-CIV-SD-1002 ISSUE C 2010

Licensee=Weston Williamson/5989497001, User=sam, albett
Not for Resale, 03/27/2016 21:05:46 MDT

DRAWING No. NR/CIV/SD/1002

TYPE

DOUBLE TRACK – 2 GIRDER

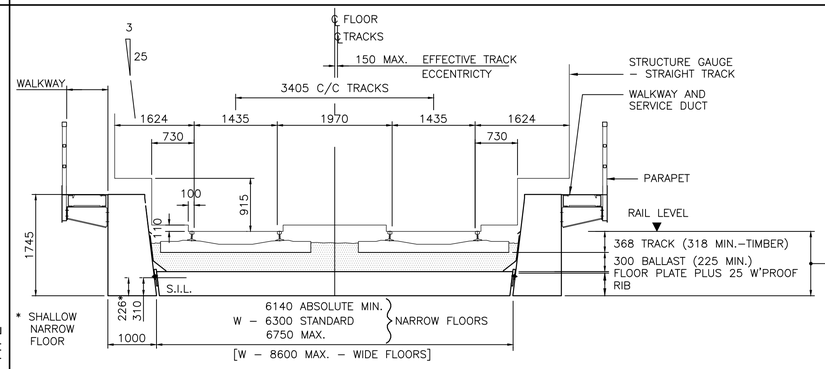

21, 24 & 27m SPANS

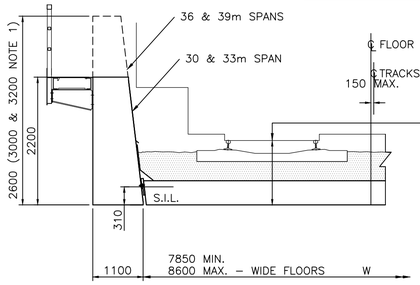

30, 33, 36 & 39m SPANS

CONSTRUCTION DEPTH – STRAIGHT TRACK (MIN. BALLAST & SLEEPER)								
FLOOR WIDTH	NARROW		WIDE		SHALLOW NARROW		DEEP WIDE	
TRACK PLUS BALLAST	543	668	543	668	543	668	543	668
HEAVY	945	1070	1013	1138	893	1018	1058	1183

DOUBLE TRACK – 3 GIRDER

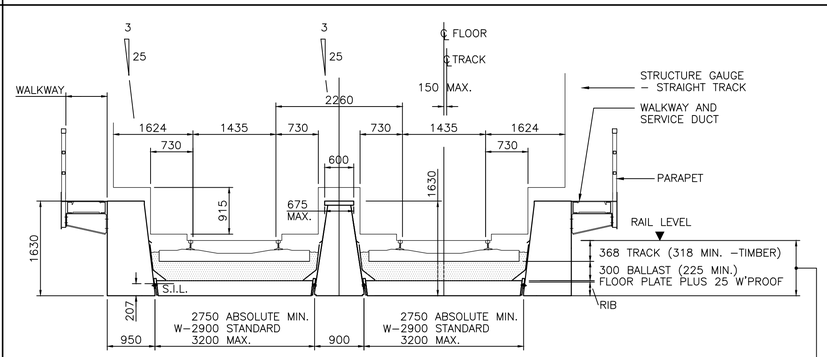

CONSTRUCTION DEPTH – STRAIGHT TRACK (THIN BALLAST & SLEEPER)				
TRACK PLUS BALLAST	543		668	
HEAVY OR LIGHT	H	L	H	L
	832	827	957	952

SINGLE TRACK

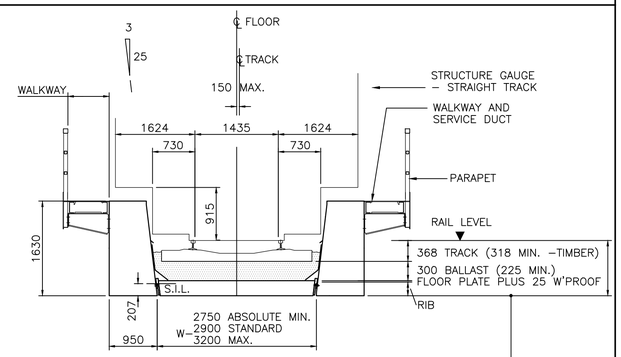

SPANS

21, 24, 27, 30, 33, 36 & 39 METRES

ARRANGEMENT OF FLOOR & TRANSVERSE RIBS

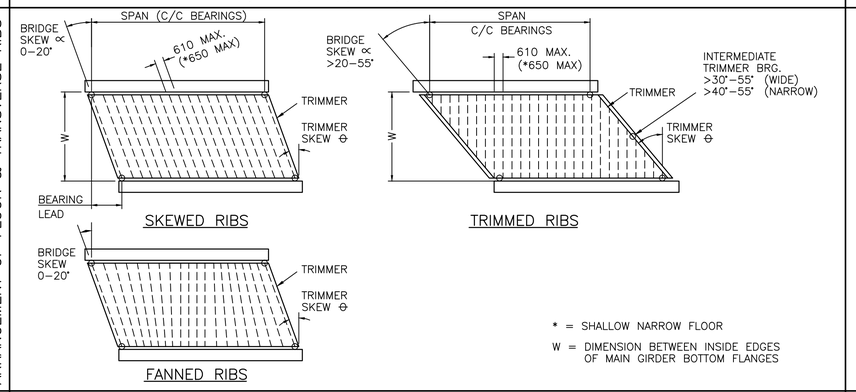

21, 24 & 27 METRES

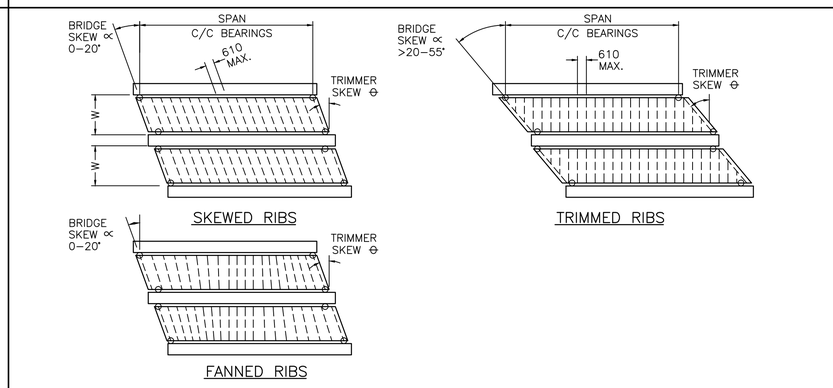

21, 24 & 27 METRES

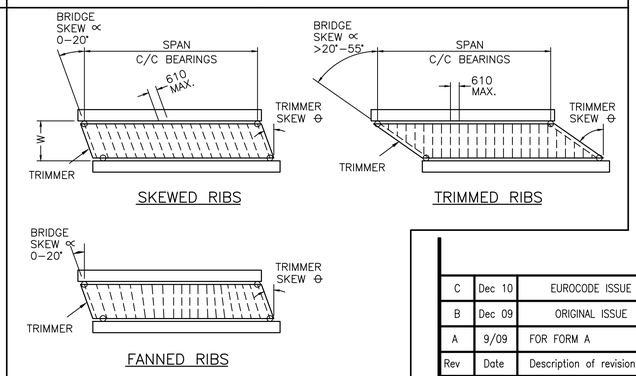

FLOOR RIBS

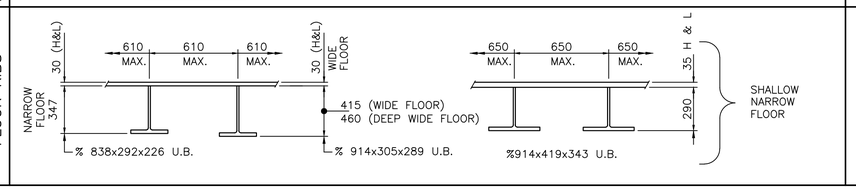

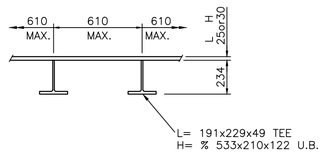

TRAFFIC \ ANNUAL TONNAGE x10⁶	42 TO 27	27 TO 18	18 TO 12	12 TO 7	12 TO 7	<5	42 TO 27	27 TO 18	18 TO 12	12 TO 7	12 TO 7	<5
25t AXLES	N/A	H	H	H	L	L	N/A	H	H	H	H	L
EC MIX	H	H	H	L	L	L	H	H	H	H	L	L
TYPE 9 MUs	H	H	L	L	L	L	H	H	L	L	L	L
	MAIN GIRDERS						FLOORS (FLOOR PLATE AND RIBS)					

SELECTION OF MAIN GIRDERS AND FLOORS FOR TRAFFIC (BASED ON FATIGUE CRITERIA)

KEY	
H	HEAVY
L	LIGHT

NOTE – FOR DOUBLE TRACK 2 GIRDER BRIDGES THERE ARE ONLY 'HEAVY' TYPE GIRDERS & FLOORS

1. FOR THE 36m AND 39m SPAN DECKS, WITH HIGHER SKEWS, DEEPER MAIN GIRDERS ARE REQUIRED – REFER TO NR/CIV/SD/1013.

Rev	Date	Description of revision	Design'd	C'kd
C	Dec 10	EUROCODE ISSUE	CH	MM
B	Dec 09	ORIGINAL ISSUE	CH	MM
A	9/09	FOR FORM A		

Network Rail
Network Rail Infrastructure Ltd.
Registered Office:
Kings Place
90 York Way
London N1 9AG

Approved	P Clark	Senior Programme Engineering Manager (Building & Civils)	P.C.	Dec–10
	Name	Position	Signature	Date

Master copy with original signatures held by Network Rail HQ CIVIL ENGINEERING STANDARD DESIGN

© COPYRIGHT NETWORK RAIL 2009

STANDARD HALF THROUGH UNDERBRIDGES BOX GIRDERS & TRANSVERSE RIBBED FLOORS

BOX GIRDER UNDERBRIDGES KEY TO TYPES

Scale	AS SHOWN	
Drawing Number	NR/CIV/SD/1002	C

Full document details: NR NR-CIV-SD-1002 ISSUE C 2010
Licence-Hexagon Williamson(5598/1001), User-sam, sam
Copyright Network Rail
Provided by IHS under licence with Network Rail
Reproduced on behalf of Network Rail. No rights to reproduce licence from IHS
Document Sharing Hub