Supplementary Information

The following information is associated with Network Rail Standard:
NR CIV/SD/1014 Rev B

Additional Content Access

Click the link below to access CAD version of this drawing.

CAD Drawing

- CIV/SD/1014

If you have any questions, or need assistance, please contact **IHS Support**

Information accessed via the links above is the property of the Copyright holder

IHS Additional Content Page

Documents
Document Sharing Hub

Copyright Network Rail
Provided by IHS under license with Network Rail
No reproduction or networking permitted without license from IHS
Full document details: NR NR-CIV-SD-1014 ISSUE B 2010

Licensee=Weston Williamson/5989497001, User=sam, albett
Not for Resale, 03/27/2016 21:04:01 MDT

DRAWING No. NR/CIV/SD/1014

TYPICAL END DIAPHRAGMS & BEARING STIFFENERS

21m, 24m & 27m SPANS

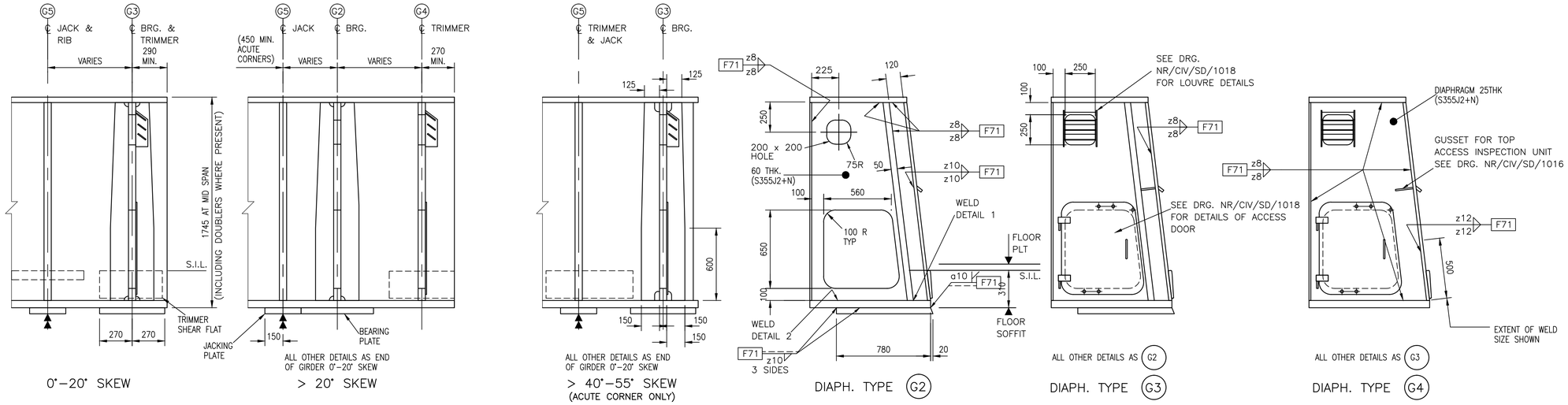

30m, 33m, 36m & 39m SPANS

PARTICULARS NOT CALLED OFF ARE AS 21m, 24m & 27m SPANS

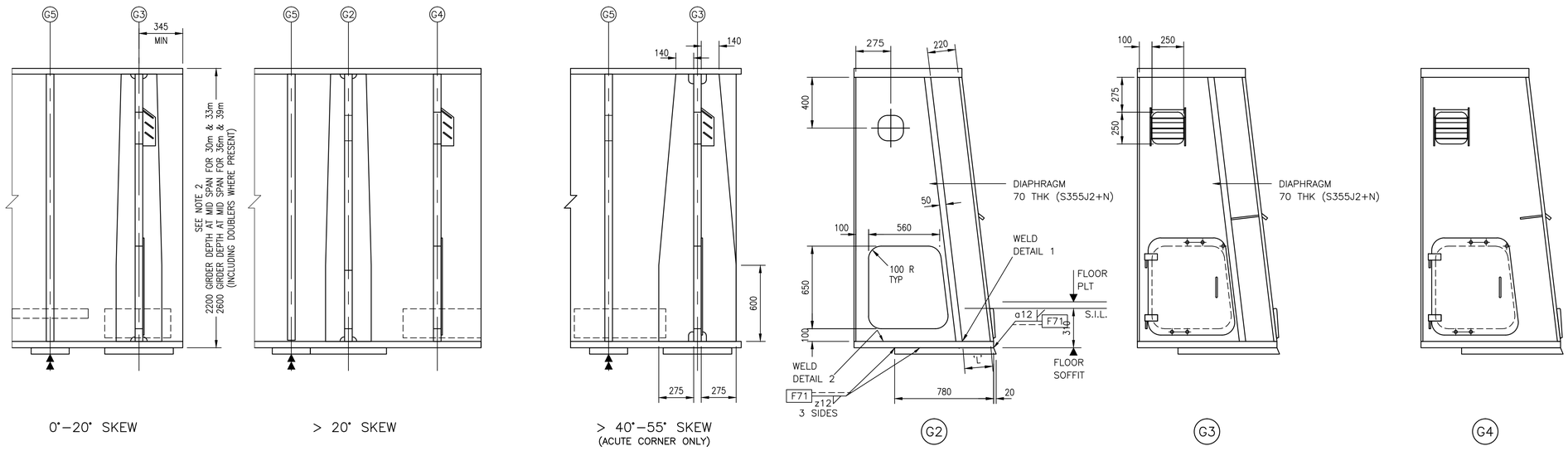

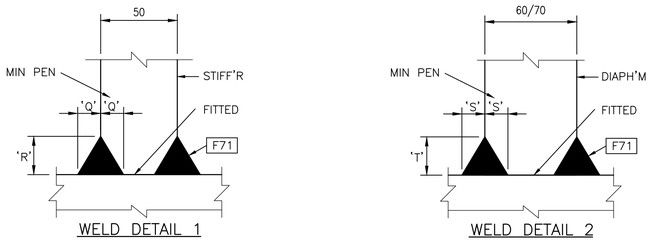

WELD DETAIL 1

WELD DETAIL 2

A	SPAN	21	24	27	30	33	36	39
Q	BUTT WELD MIN. PENET/N	15	15	18	15	15	15	15
R	BUTT WELD MIN. STIFF/BTM. FLG.	25	25	30	25	25	25	25
S	BUTT WELD MIN. PENET/N	15	18	18	18	18	20	20
T	BUTT WELD DIAPHRAGM/B.F.	25	30	30	30	30	35	35

HEAVY GIRDERS

1. JACKING STIFFENER TO BE AS CLOSE AS POSSIBLE TO BEARING BUT IS GENERALLY DETERMINED BY LOCATIONS OF FLOOR CONNECTIONS. SEE FLOOR DRAWING.
2. GIRDER DEPTHS ALSO VARY WITH DECK SKEW. REFER TO DRAWING NR/CIV/SD/1013.

Rev	Date	Description of revision	Design'd	C'kd
B	Dec 10	EUROCODE ISSUE	CH	MM
A	Dec 09	ORIGINAL ISSUE	CH	MM

Network Rail
Network Rail Infrastructure Ltd
Registered Office:
Kings Place
90 York Way
London
N1 9AG

Approved	P Clark	Senior Programme Engineering Manager (Building & Civils)	P.C.	Dec–10
	Name	Position	Signature	Date

Master copy with original signatures held by Network Rail HQ
CIVIL ENGINEERING STANDARD DESIGN

© COPYRIGHT NETWORK RAIL 2009

STANDARD HALF THROUGH UNDERBRIDGES
BOX GIRDERS & TRANSVERSE RIBBED FLOORS

DOUBLE TRACK – 2 GIRDER

MAIN GIRDERS
DETAILS – SHEET 1 OF 2

Scale	1:20, 1:2	
Drawing Number	NR/CIV/SD/1014	B

Full document details: NR NR-CIV-SD-1014 ISSUE B 2010
Documents Sharing Hub
Licensed Image Williamson/0084100. User:sam. sfirst
Copyright Network Rail
Provided by IHS under license with Network Rail
No reproduction or networking permitted without license from IHS