Supplementary Information

The following information is associated with Network Rail Standard:
**NR CIV/SD/1015** Rev A

## Additional Content Access

Click the link below to access CAD version of this drawing.

### CAD Drawing

- CIV/SD/1015

If you have any questions, or need assistance, please contact **IHS Support**

Information accessed via the links above is the property of the Copyright holder

**IHS Additional Content Page**

Documents
Document Sharing Hub

Copyright Network Rail
Provided by IHS under license with Network Rail
No reproduction or networking permitted without license from IHS
Full document details: NR NR-CIV-SD-1015 ISSUE B 2010

Licensee=Weston Williamson/5989497001, User=sam, albett
Not for Resale, 03/27/2016 21:03:49 MDT

DRAWING No. NR/CIV/SD/1015

## 21m, 24m & 27m SPANS

### TYPICAL INTERMEDIATE DIAPHRAGMS

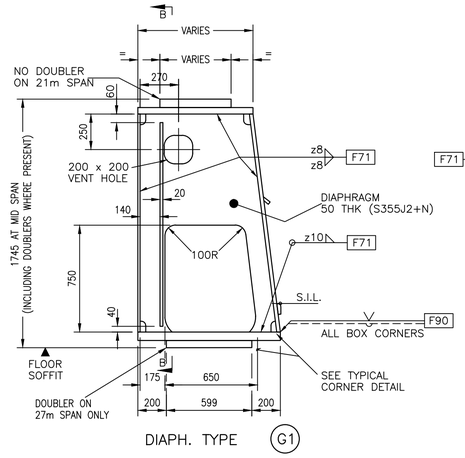


DIAPH. TYPE (G1)

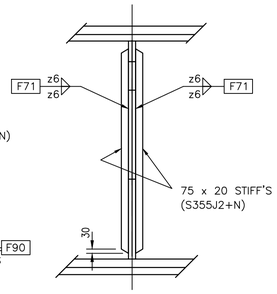


SECTION B–B

### JACKING STIFFENERS

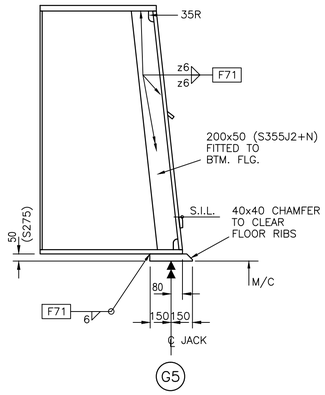


(G5)

NOTE
WHERE LONGITUDINAL GRADIENT OF SPAN EXCEEDS 1:100 JACKING PLATE TO BE TAPERED TO ACHIEVE HORIZONTAL SOFFIT (AVERAGE THICKNESS AT ℄ = 50mm)

▲ DENOTES JACKING POINT

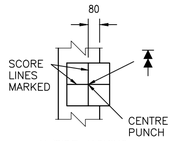


U/SIDE JACKING PLATES

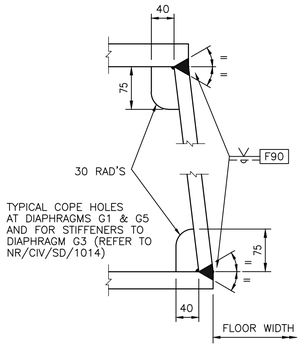


TYPICAL CORNER WELDS

NOTE
ALTERNATIVE WELD PREPARATIONS MAY ONLY BE USED SUBJECT TO APPROVAL FOLLOWING PROCEDURE TRIALS.

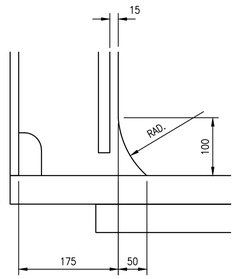


INTERMEDIATE DIAPHRAGM SHAPE OF ACCESS.
(21, 24 & 27 SPANS)

## 30m, 33m, 36m & 39m SPANS

PARTICULARS NOT CALLED OFF ARE AS 21m, 24m & 27m SPANS

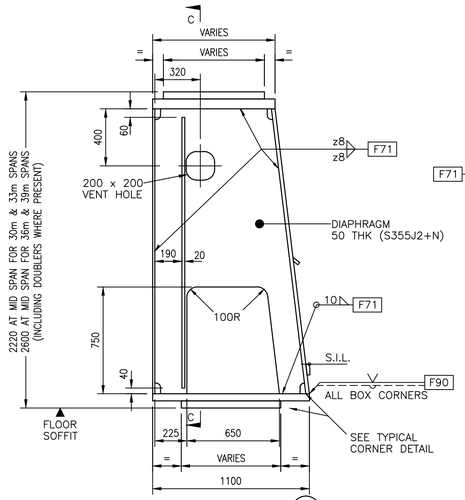


DIAPH. TYPE (G1)

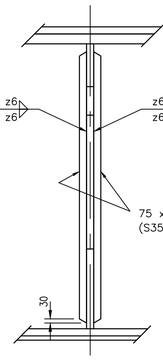


SECTION C–C

### INTERMEDIATE STIFFENERS

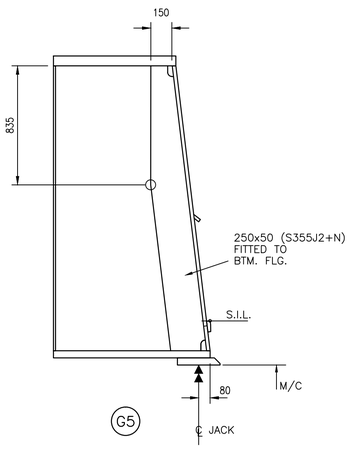


(G5)

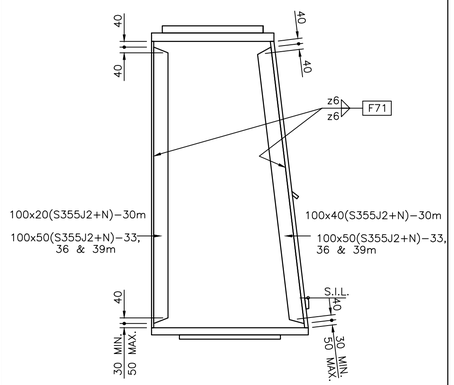


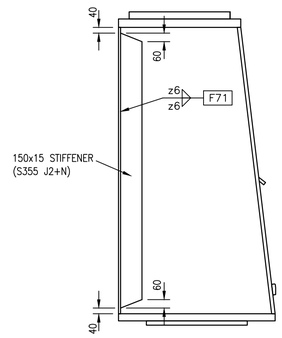


WALKWAY BRACKET STIFFENERS
PROVIDE WALKWAY BRACKET STIFFENER WHERE BRACKET IS NOT WITHIN 200mm OF A DIAPHRAGM OR OTHER STIFFENER

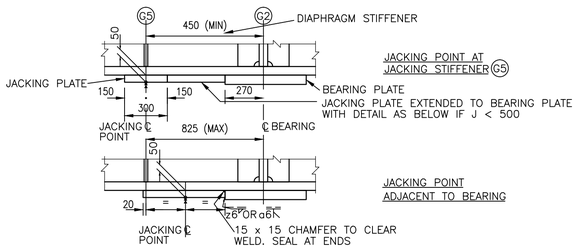


JACKING POINT AT JACKING STIFFENER (G5)

JACKING POINT ADJACENT TO BEARING

GIRDER JACKING POINT ALTERNATIVES

NOTE: JACKING POINT IS TO BE SELECTED DEPENDING UPON WHETHER JACKING IS TO BE CARRIED OUT ON ABUTMENT OR FROM TEMPORARY SUPPORT TRESTLE IN FRONT

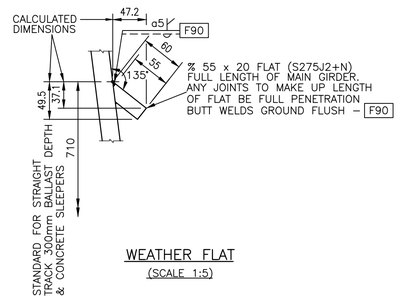


WEATHER FLAT
(SCALE 1:5)

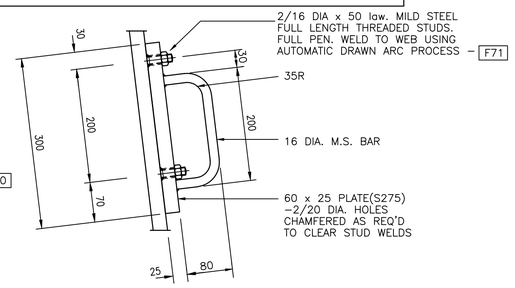


GRAB HANDLES
(INNER WEB)
TO BE SPACED AT 6000 CTRS MAXIMUM & NOT MORE THAN 3000 FROM CTRS OF BEARINGS

NOTE! – HANDLE TO BE PAINTED WHITE OR, IF MAIN STEELWORK IS WHITE OR OTHER LIGHT COLOUR, A CONTRASTING DARK COLOUR.

| Rev | Date | Description of revision | Design'd | C'kd |
|---|---|---|---|---|
| B | Dec 10 | EUROCODE ISSUE | CH | MM |
| A | Dec 09 | ORIGINAL ISSUE | CH | MM |

Network Rail

Network Rail Infrastructure Ltd
Registered Office:
Kings Place
90 York Way
London
N1 9AG

| | Name | Position | Signature | Date |
|---|---|---|---|---|
| Approved | P Clark | Senior Programme Engineering Manager (Building & Civils) | P.C. | Dec–10 |

Master copy with original signatures held by Network Rail HQ CIVIL ENGINEERING STANDARD DESIGN

© COPYRIGHT NETWORK RAIL 2009

STANDARD HALF THROUGH UNDERBRIDGES
BOX GIRDERS & TRANSVERSE RIBBED FLOORS

# DOUBLE TRACK – 2 GIRDER

## MAIN GIRDERS DETAILS – SHEET 2 OF 2

| | |
|---|---|
| Scale | 1:20, 1:5 |
| Drawing Number | NR/CIV/SD/1015 B |

Full document details: NR NR-CIV-SD-1015 ISSUE B 2010
Documents Document Sharing Hub
Licensee=Mott MacDonald Group Limited 5895655, User=sam.elliott
Not for resale
Copyright Network Rail
Provided by IHS under license with Network Rail
No reproduction or networking permitted without license from IHS