Supplementary Information

The following information is associated with Network Rail Standard:
NR CIV/SD/1016 Rev B

Additional Content Access

Click the link below to access CAD version of this drawing.

CAD Drawing

- CIV/SD/1016

If you have any questions, or need assistance, please contact **IHS Support**

Information accessed via the links above is the property of the Copyright holder

IHS Additional Content Page

Documents
Document Sharing Hub

Copyright Network Rail
Provided by IHS under license with Network Rail
No reproduction or networking permitted without license from IHS
Full document details: NR NR-CIV-SD-1016 ISSUE B 2010

Licensee=Weston Williamson/5989497001, User=sam, albett
Not for Resale, 03/27/2016 21:03:57 MDT

DRAWING No. NR/CIV/SD/1016

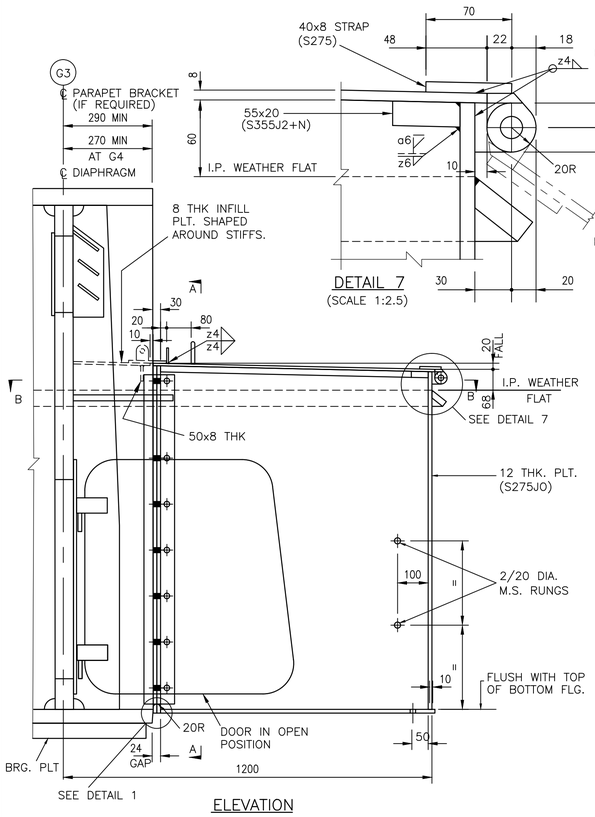

ELEVATION

BOLT ON INSPECTION UNIT

TOP ACCESS TYPE

(SCALE 1:10)

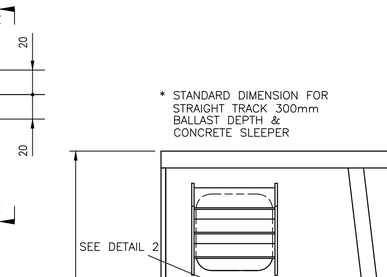

DETAIL 7

(SCALE 1:2.5)

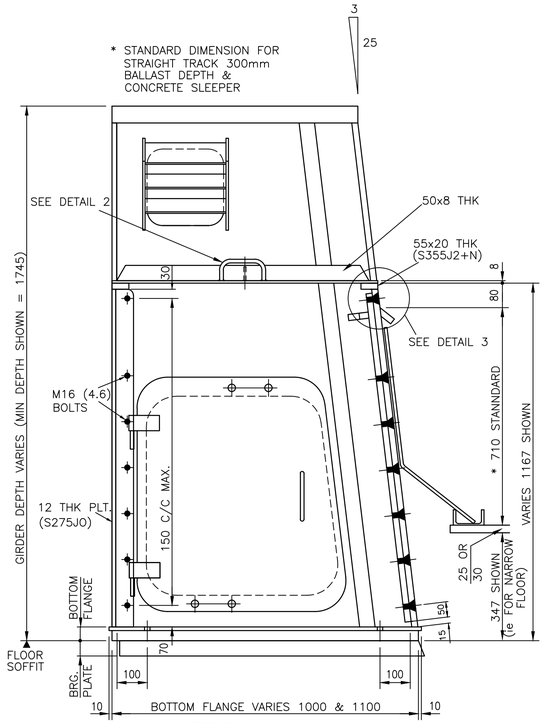

SECTION A–A

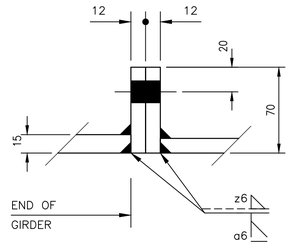

DETAIL 5

(SCALE 1:2.5)

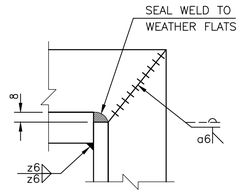

DETAIL 6

(SCALE 1:2.5)

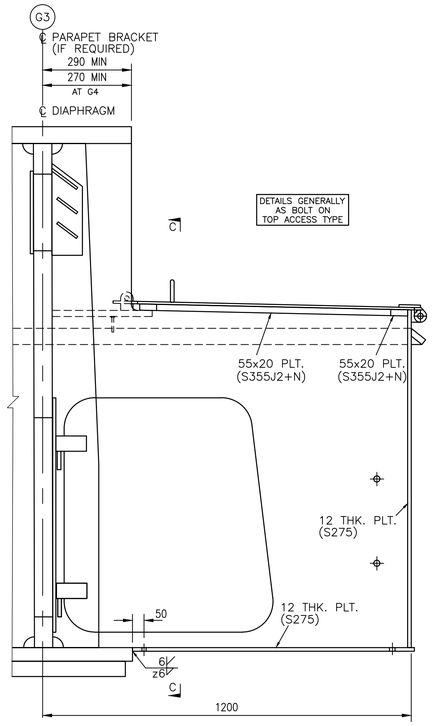

ELEVATION

INTEGRAL INSPECTION UNIT

TOP ACCESS TYPE

(SCALE 1:10)

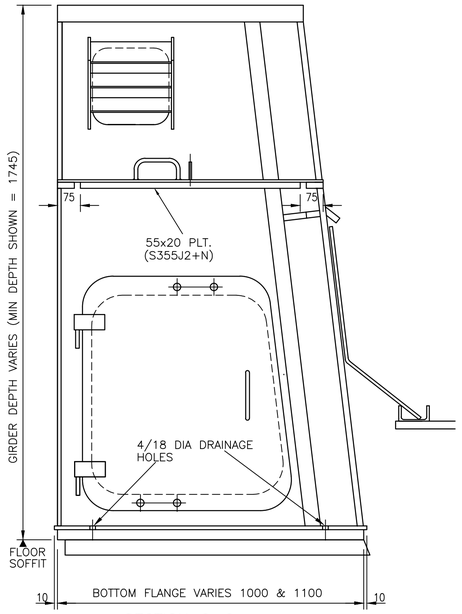

SECTION C–C

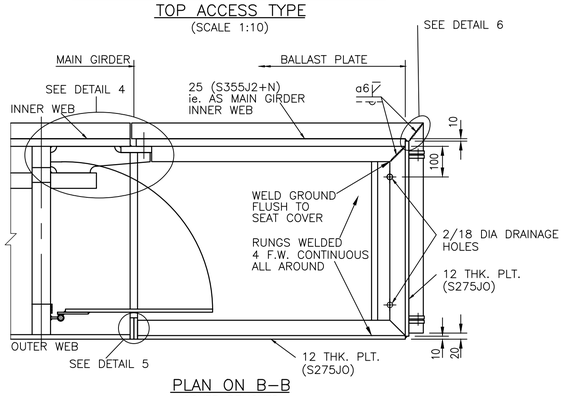

PLAN ON B–B

COVER REMOVED

(SCALE 1:10)

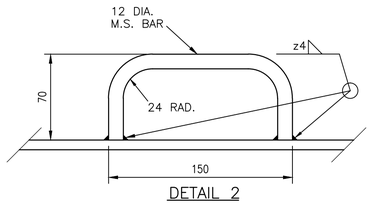

DETAIL 2

(SCALE 1:2.5)

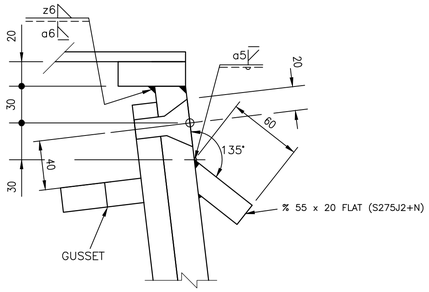

DETAIL 3

(SCALE 1:2.5)

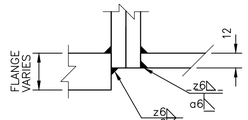

DETAIL 1

(SCALE 1:2.5)

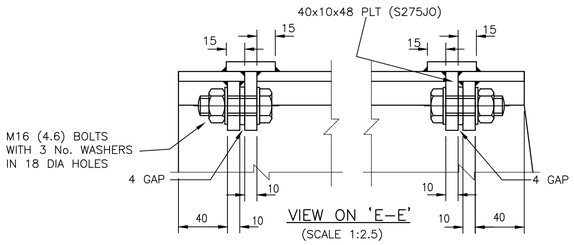

VIEW ON 'E–E'

(SCALE 1:2.5)

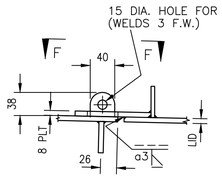

LID LOCKING DETAIL

AT BOLT ON INSPECTION UNIT

1No. LOCATION PER LID

(SCALE 1:5)

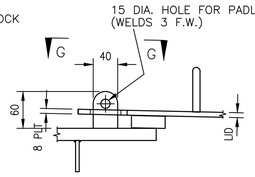

LID LOCKING DETAIL

AT INTEGRAL INSPECTION UNIT

1No. LOCATION PER LID

(SCALE 1:5)

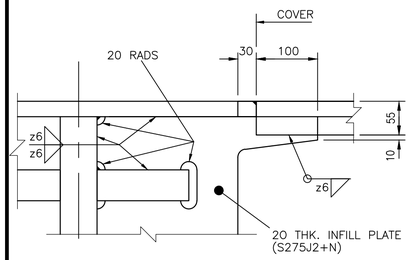

SECTION D–D

(SCALE 1:5)

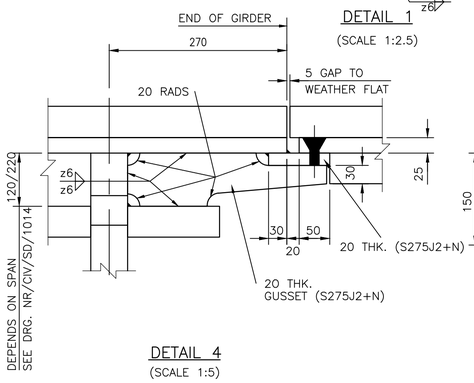

DETAIL 4

(SCALE 1:5)

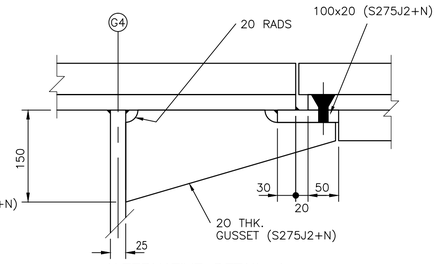

ALTERNATIVE DETAIL 4

(AT DIAPHRAGMS G4 FOR SKEWS>20°)

(SCALE 1:5)

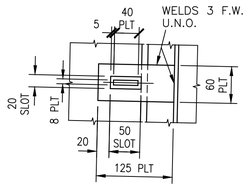

PLAN ON F–F

(SCALE 1:5)

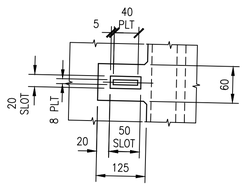

PLAN ON G–G

(SCALE 1:5)

Rev	Date	Description of revision	Design'd	C'kd
B	Dec 10	EUROCODE ISSUE	CH	MM
A	Dec 09	ORIGINAL ISSUE	CH	MM

Network Rail

Network Rail Infrastructure Ltd
Registered Office:
Kings Place
90 York Way
London
N1 9AG

Approved	P Clark	Senior Programme Engineering Manager (Building & Civils)	P.C.	Dec–10
	Name	Position	Signature	Date

Master copy with original signatures held by Network Rail HQ
CIVIL ENGINEERING STANDARD DESIGN

© COPYRIGHT NETWORK RAIL 2009

STANDARD HALF THROUGH UNDERBRIDGES
BOX GIRDERS & TRANSVERSE RIBBED FLOORS

DOUBLE TRACK – 2 GIRDER

GIRDER INSPECTION UNITS
SHEET 1 OF 2

Scale	1:2.5, 1:5 & 1:10	
Drawing Number	NR/CIV/SD/1016	B

Full document details: NR NR-CIV-SD-1016 ISSUE B 2010
Documents Document Sharing Hub
Licensee:nelson williams(c0169120). User:sam. sheet
Copyright Network Rail
Provided by IHS under licence with Network Rail
No reproduction or networking permitted without licence from IHS