Supplementary Information

The following information is associated with Network Rail Standard:
NR CIV/SD/1017 Rev B

Additional Content Access

Click the link below to access CAD version of this drawing.

CAD Drawing

- CIV/SD/1017

If you have any questions, or need assistance, please contact **IHS Support**

Information accessed via the links above is the property of the Copyright holder

IHS Additional Content Page

--`,,,,,,`,,,,,,`,,`,,,,,,,,`-`-`,,`,,`,`,,`---

Documents
Document Sharing Hub

Copyright Network Rail
Provided by IHS under license with Network Rail
No reproduction or networking permitted without license from IHS
Full document details: NR NR-CIV-SD-1017 ISSUE B 2010

Licensee=Weston Williamson/5989497001, User=sam, albett
Not for Resale, 03/27/2016 21:04:54 MDT

DRAWING No. NR/CIV/SD/1017

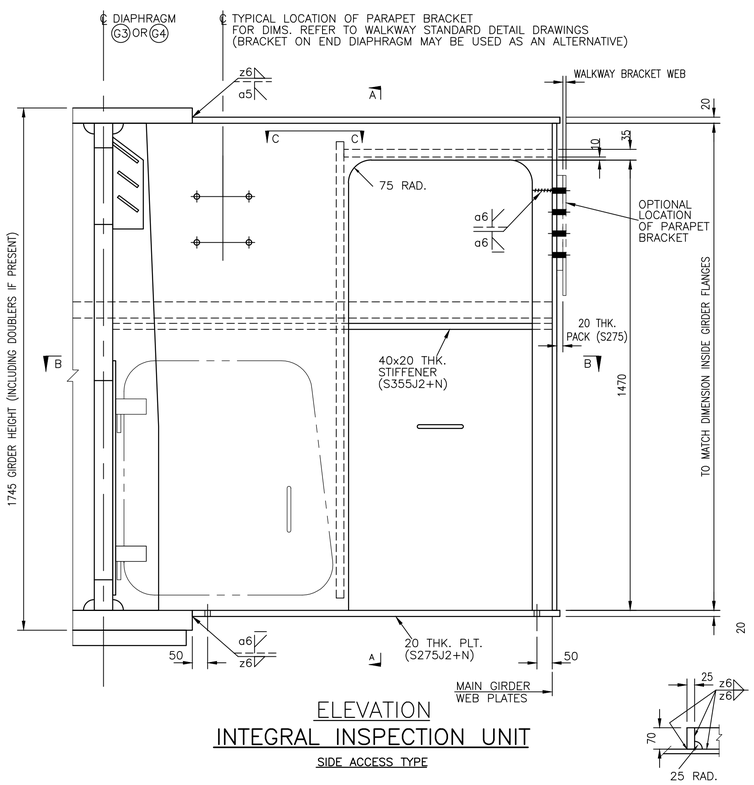

ELEVATION

INTEGRAL INSPECTION UNIT

SIDE ACCESS TYPE

SECTION C–C

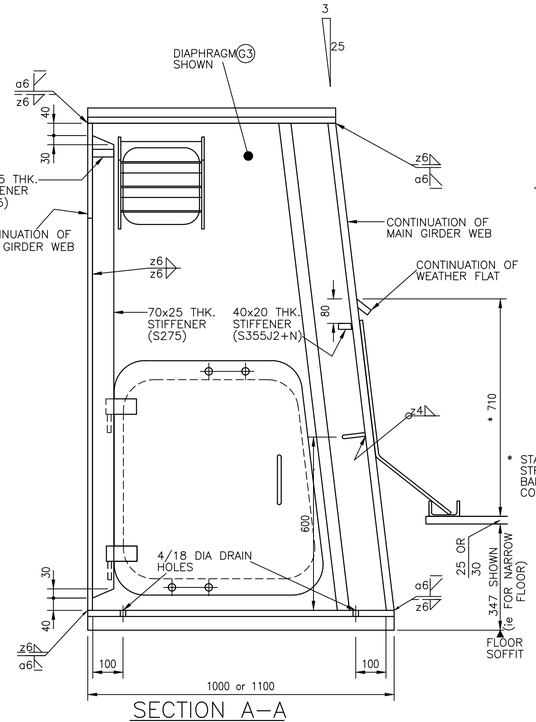

SECTION A–A

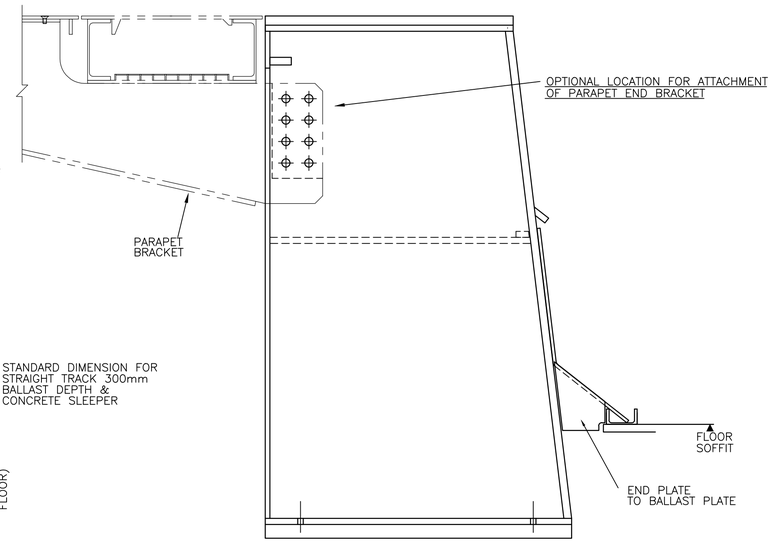

END ELEVATION

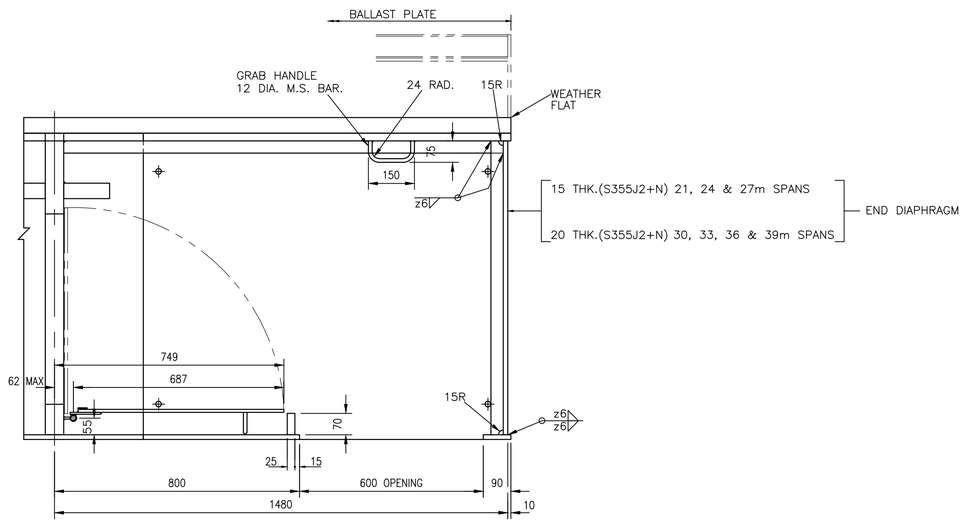

PLAN ON B–B

Rev	Date	Description of revision	Design'd	C'kd
B	Dec 10	EUROCODE ISSUE	CH	MM
A	Dec 09	ORIGINAL ISSUE	CH	MM

Network Rail

Network Rail Infrastructure Ltd
Registered Office:
Kings Place
90 York Way
London
N1 9AG

	Name	Position	Signature	Date
Approved	P Clark	Senior Programme Engineering Manager (Building & Civils)	P.C.	Dec–10

Master copy with original signatures held by Network Rail HQ CIVIL ENGINEERING STANDARD DESIGN

© COPYRIGHT NETWORK RAIL 2009

STANDARD HALF THROUGH UNDERBRIDGES BOX GIRDERS & TRANSVERSE RIBBED FLOORS

DOUBLE TRACK – 2 GIRDER

GIRDER INSPECTION UNITS SHEET 2 OF 2

Scale	1:10
Drawing Number	NR/CIV/SD/1017 B

Full document details: NR NR-CIV-SD-10171SIUE B 2010
Licensed Network Rail Document Standard Hub
Copyright Network Rail
Provided by IHS under licence with Network Rail
Reproduced by permission of the Controller of HMSO and/or Network Rail. Licence from IHS