The following information is associated with Network Rail Standard:
NR CIV/SD/1018 Rev B

Additional Content Access

Click the link below to access CAD version of this drawing.

CAD Drawing

- CIV/SD/1018

If you have any questions, or need assistance, please contact **IHS Support**

Information accessed via the links above is the property of the Copyright holder

IHS Additional Content Page

--`,,,,,,`,,,,,,`,,`,,,,,,,,`-`-`-,,`,,`,`,,`---

Documents
Document Sharing Hub

Copyright Network Rail
Provided by IHS under license with Network Rail
No reproduction or networking permitted without license from IHS
Full document details: NR NR-CIV-SD-1018 ISSUE B 2010

Licensee=Weston Williamson/5989497001, User=sam, albett
Not for Resale, 03/27/2016 21:04:26 MDT

Full document details: NR NR-CIV-SD-1018 ISSUE B 2010

DRAWING No. NR/CIV/SD/1018

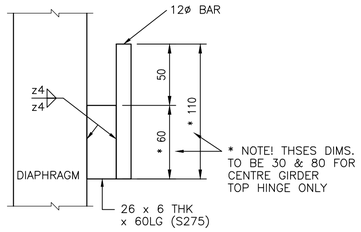

ELEVATION ON HINGE

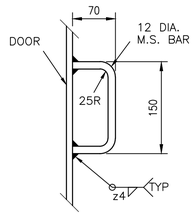

HANDLE

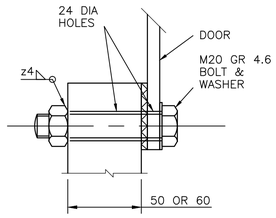

DOOR FIXING

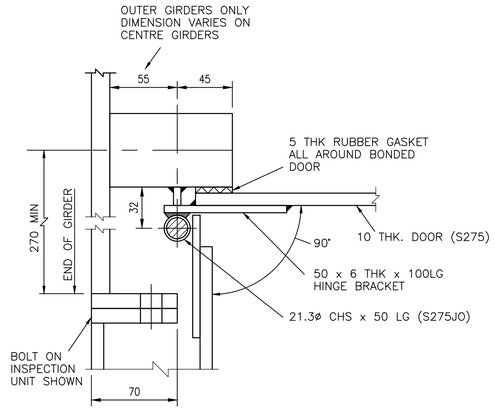

PLAN ON HINGE

(OUTER GIRDER)

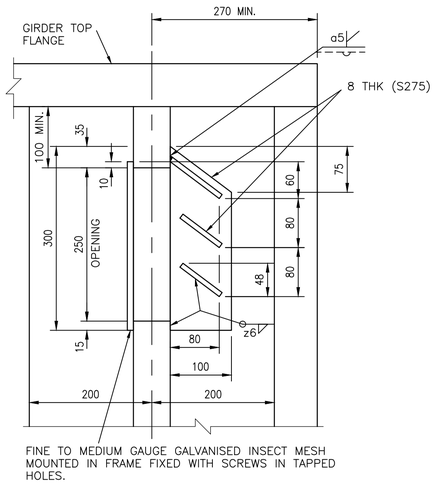

LOUVRE DETAILS

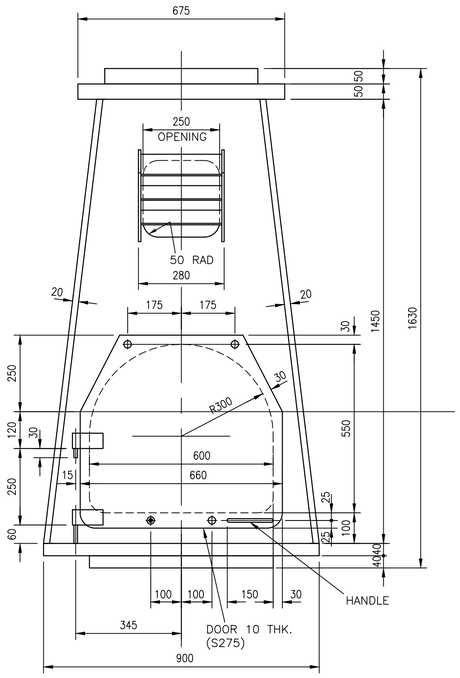

CENTRE GIRDER ACCESS DOOR & LOUVRE

DOUBLE TRACK – 3 GIRDER
24m HEAVY GIRDER SHOWN

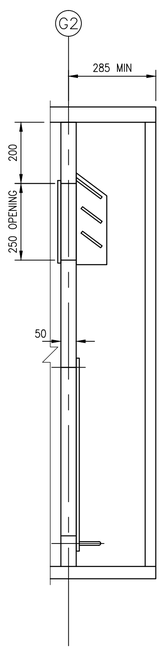

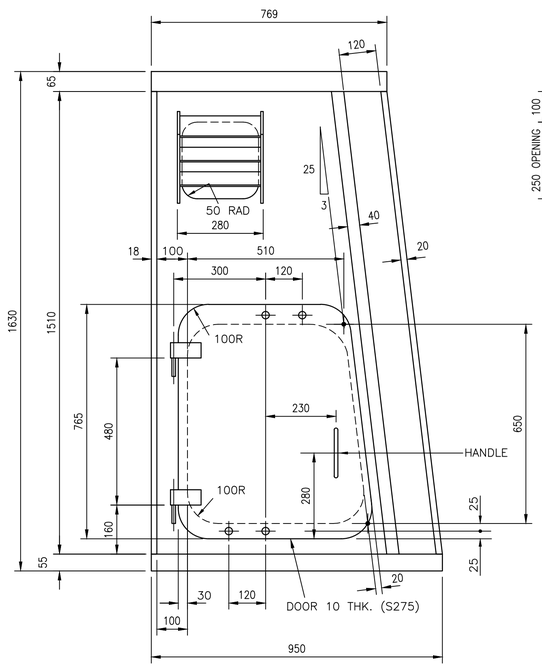

OUTER GIRDER ACCESS DOOR & LOUVRE

SINGLE TRACK – 2 GIRDER AND DOUBLE TRACK – 3 GIRDER
24m HEAVY GIRDER SHOWN

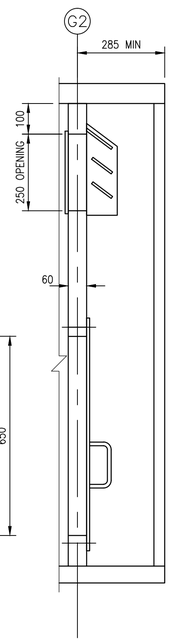

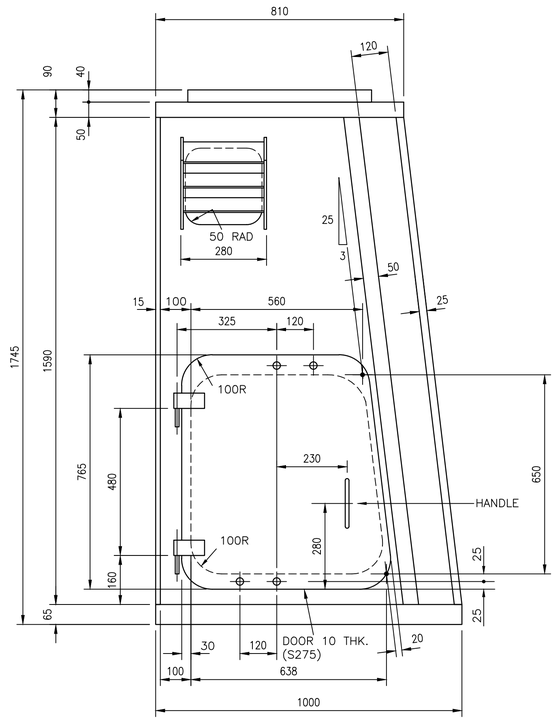

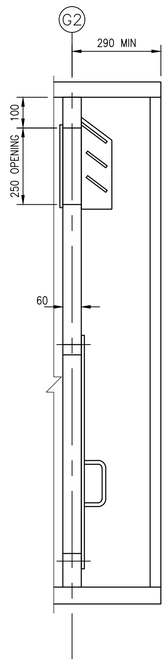

OUTER GIRDER ACCESS DOOR & LOUVRE

2 GIRDER – DOUBLE TRACK
24m HEAVY GIRDER SHOWN

Rev	Date	Description of revision	Design'd	C'kd
B	Dec 10	EUROCODE ISSUE	CH	MM
A	Dec 09	ORIGINAL ISSUE	CH	MM

Network Rail

Network Rail Infrastructure Ltd
Registered Office:
Kings Place
90 York Way
London
N1 9AG

	Name	Position	Signature	Date
Approved	P Clark	Senior Programme Engineering Manager (Building & Civils)	P.C.	Dec–10

Master copy with original signatures held by Network Rail HQ
CIVIL ENGINEERING STANDARD DESIGN

© COPYRIGHT NETWORK RAIL 2009

STANDARD HALF THROUGH UNDERBRIDGES BOX GIRDERS & TRANSVERSE RIBBED FLOORS

MAIN GIRDERS

END DIAPHRAGM ACCESS DOORS AND LOUVRE DETAILS

Scale	1:5, 1:10
Drawing Number	NR/CIV/SD/1018 B

Documents
Document Sharing Hub
Licensee:Hitachi Williams(c)20080205
Licence Expiry:Wed,01-Jan-2020
User:sam, albert
Copyright Network Rail
Provided by IHS under licence with Network Rail
No reproduction or networking permitted without licence from IHS