Supplementary Information

The following information is associated with Network Rail Standard:
NR CIV/SD/1020 Rev B

Additional Content Access

Click the link below to access CAD version of this drawing.

CAD Drawing

- CIV/SD/1020

If you have any questions, or need assistance, please contact **IHS Support**

Information accessed via the links above is the property of the Copyright holder

IHS Additional Content Page

Documents
Document Sharing Hub

Copyright Network Rail
Provided by IHS under license with Network Rail
No reproduction or networking permitted without license from IHS
Full document details: NR NR-CIV-SD-1020 ISSUE B 2010

Licensee=Weston Williamson/5989497001, User=sam, albett
Not for Resale, 03/27/2016 21:04:40 MDT

DRAWING No. NR/CIV/SD/1020

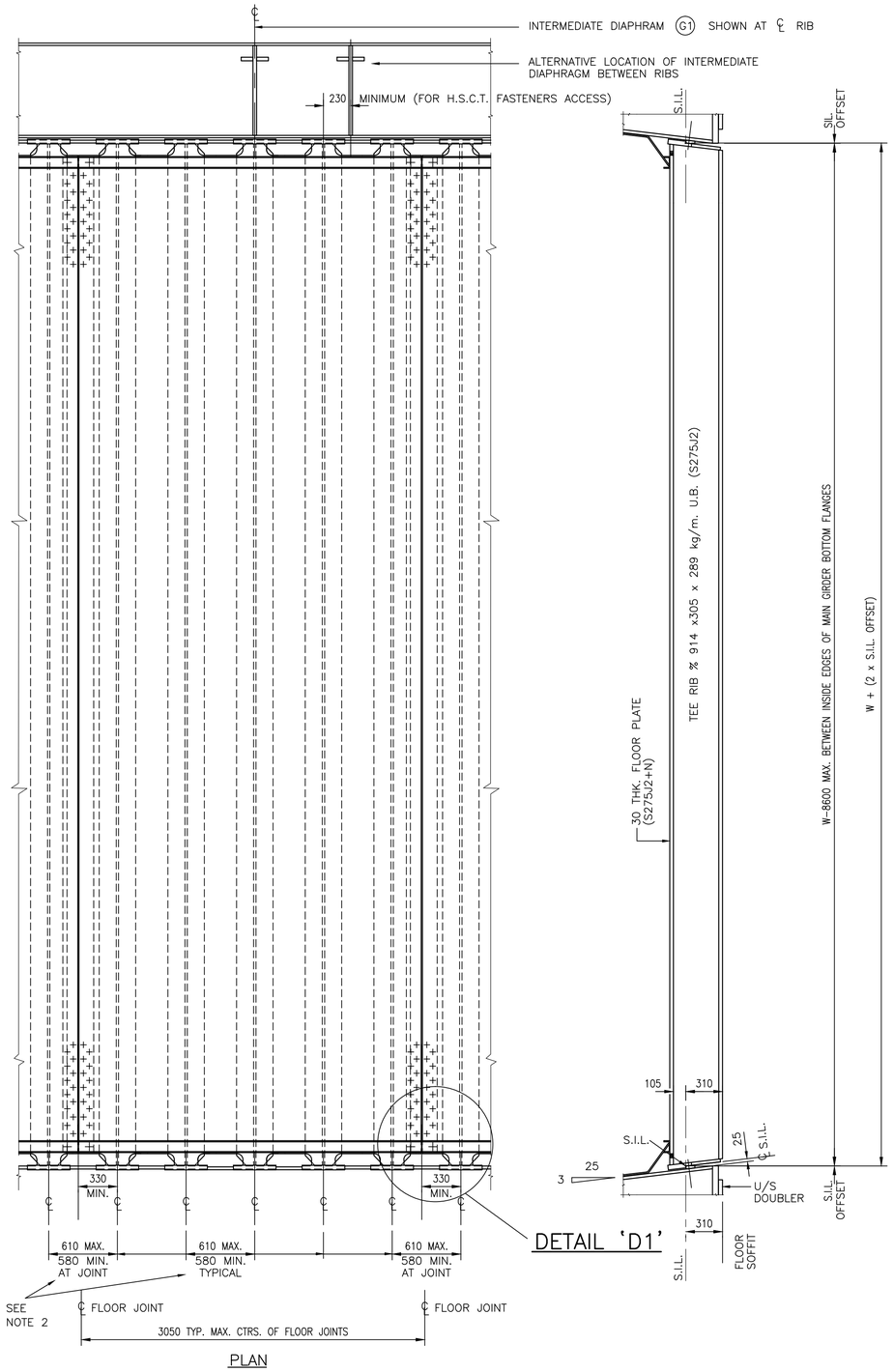

PLAN

Typical Trimmer Unit.

WIDE FLOOR / RIBS SQUARE TO GIRDER.

TYPICAL CROSS SECTION

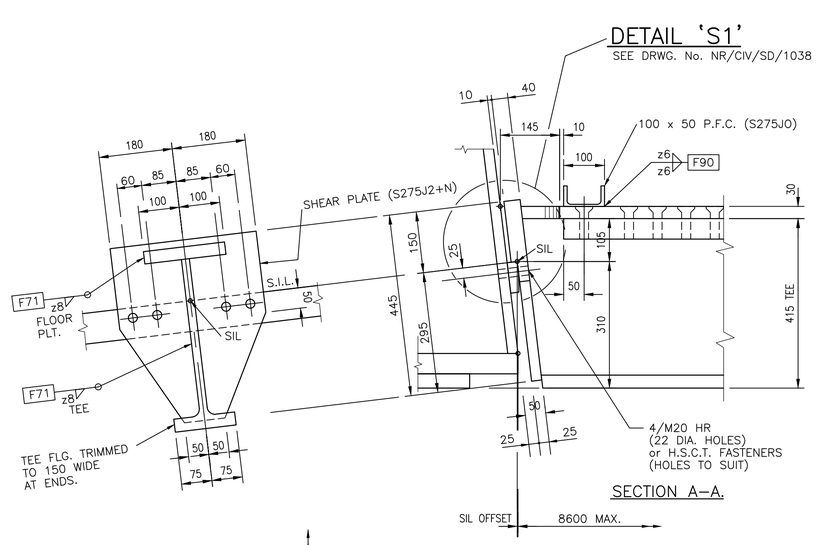

SECTION A–A.

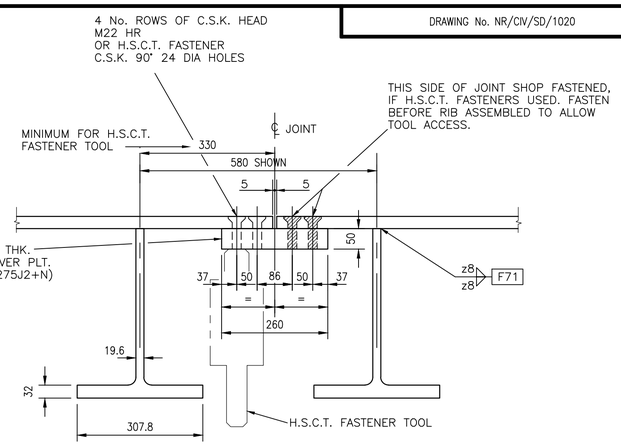

SECTION B–B.

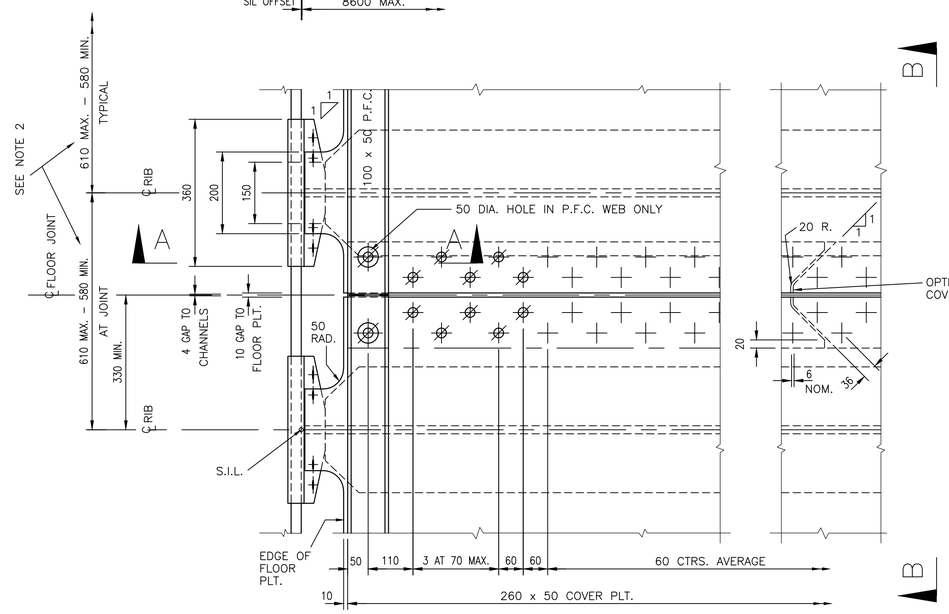

PLAN

DETAIL 'D1'

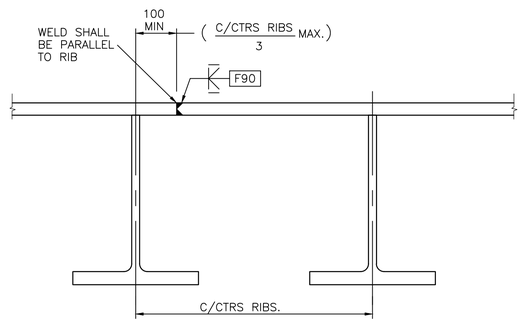

LOCATION OF FLOOR PLATE BUTT WELD

NOTE! THE NUMBER OF BUTT WELDS SHALL BE MINIMISED AS FAR AS POSSIBLE & LIMITED TO ONE PER UNIT. LOCATIONS SHALL BE SUBJECT TO WRITTEN APPROVAL OF THE ENGINEER.

1. TEE RIBS SHALL BE FORMED IN ONE LENGTH. INTERMEDIATE WELDED JOINTS ARE NOT PERMITTED.
2. 580 RIB SPACING IS DESIRABLE MINIMUM SPACING TO ALLOW WELDING, PROTECTIVE TREATMENT & MAINTENANCE.
3. HIGH STRENGTH CLAMP TYPE (H.S.C.T.) FASTENERS TO HAVE STRENGTH AND PERFORMANCE EQUIVALENT TO SPECIFIED HR BOLTS AND ARE TO BE APPROVED BY THE ENGINEER. HOLE DIAMETERS TO BE MODIFIED TO SUIT H.S.C.T. FASTENERS AS REQUIRED.

Rev	Date	Description of revision	Design'd	C'kd
B	Dec 10	EUROCODE ISSUE	CH	MM
A	Dec 09	ORIGINAL ISSUE	CH	MM

Network Rail Infrastructure Ltd
Registered Office:
Kings Place
90 York Way
London
N1 9AG

Approved	P Clark	Senior Programme Engineering Manager (Building & Civils)	P.C.	Dec–10
	Name	Position	Signature	Date

Master copy with original signatures held by Network Rail HQ CIVIL ENGINEERING STANDARD DESIGN

© COPYRIGHT NETWORK RAIL 2009

STANDARD HALF THROUGH UNDERBRIDGES BOX GIRDERS & TRANSVERSE RIBBED FLOORS

DOUBLE TRACK – 2 GIRDERS

WIDE FLOORS 0° SKEW
SHEET 1 OF 2

Scale	1:25, 1:7.5	
Drawing Number	NR/CIV/SD/1020	B

Full document details: NR NR-CIV-SD-1020 ISSUE B 2010
Document Shared via Hub
Copyright Network Rail
Provided by IHS under licence with Network Rail
Licensee=Mapon Volkovich/5934100, User=sam, sfirst
No reproduction or networking permitted without licence from IHS