Supplementary Information

The following information is associated with Network Rail Standard:
NR CIV/SD/1021 Rev A

Additional Content Access

Click the link below to access CAD version of this drawing.

CAD Drawing

- CIV/SD/1021

If you have any questions, or need assistance, please contact **IHS Support**

Information accessed via the links above is the property of the Copyright holder

IHS Additional Content Page

Documents
Document Sharing Hub

Copyright Network Rail
Provided by IHS under license with Network Rail
No reproduction or networking permitted without license from IHS
Full document details: NR NR-CIV-SD-1021 ISSUE B 2010

Licensee=Weston Williamson/5989497001, User=sam, albett
Not for Resale, 03/27/2016 21:04:21 MDT

DRAWING No. NR/CIV/SD/1021

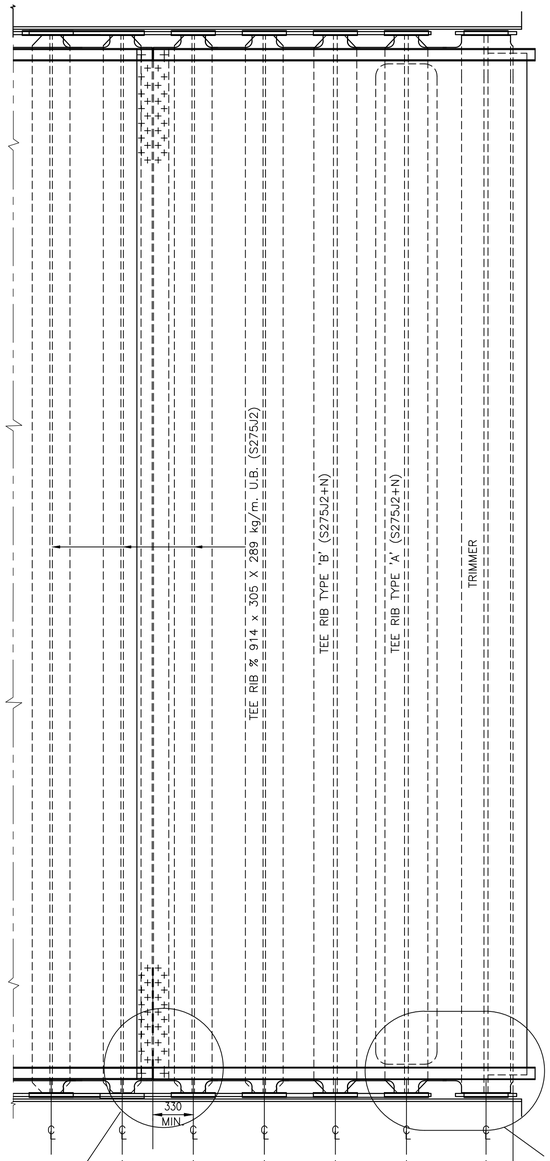

PLAN

Typical Trimmer Unit.

WIDE FLOOR / RIBS SQUARE TO GIRDER.

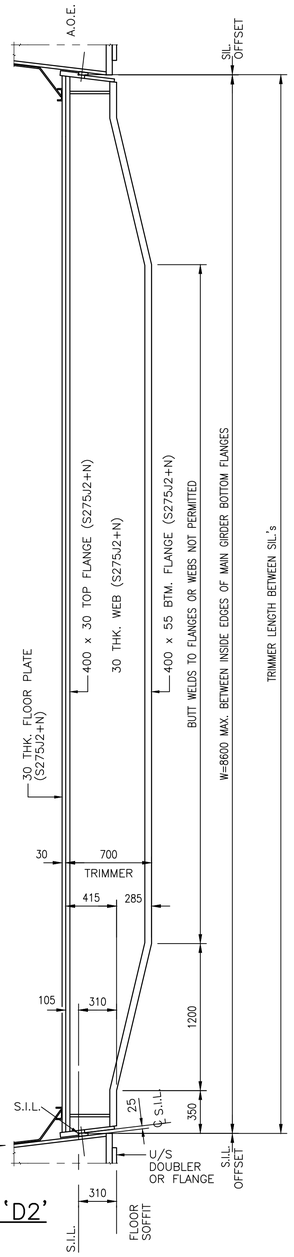

CROSS SECTION AT TRIMMER

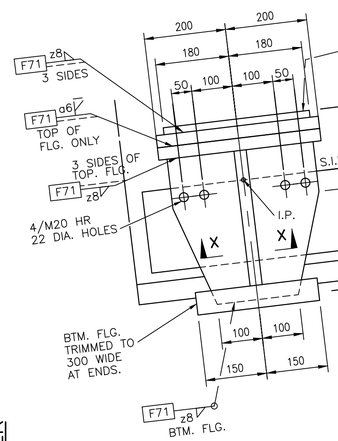

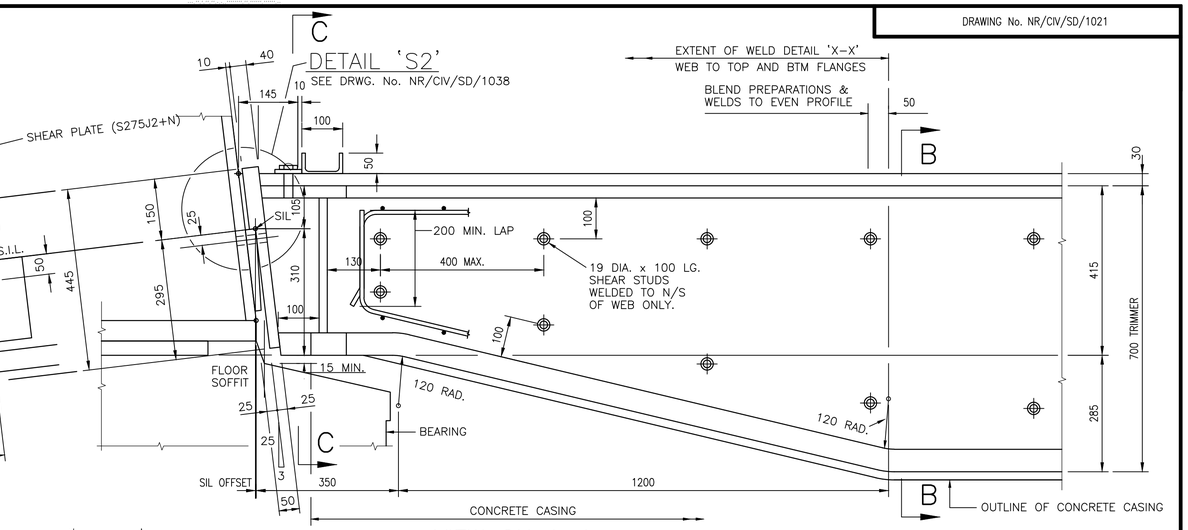

VIEW ON A–A

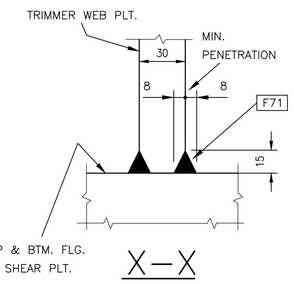

X–X

WELD DETAIL.

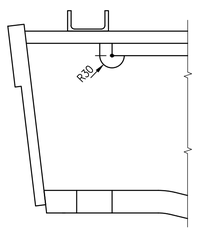

SECTION D–D

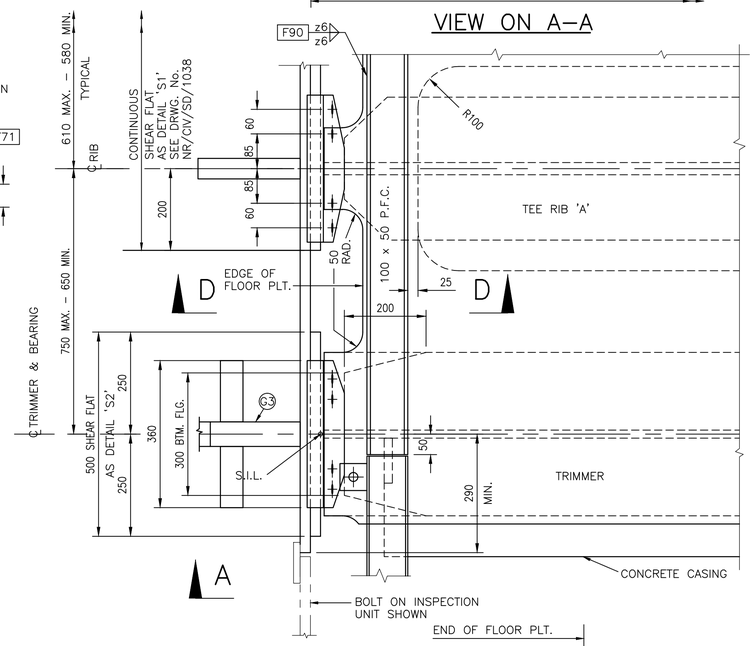

DETAIL 'D2'

PLAN

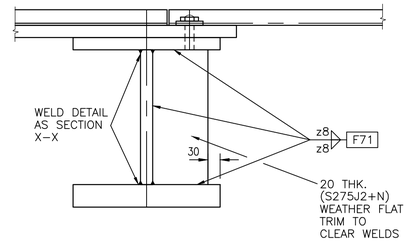

SECTION C–C

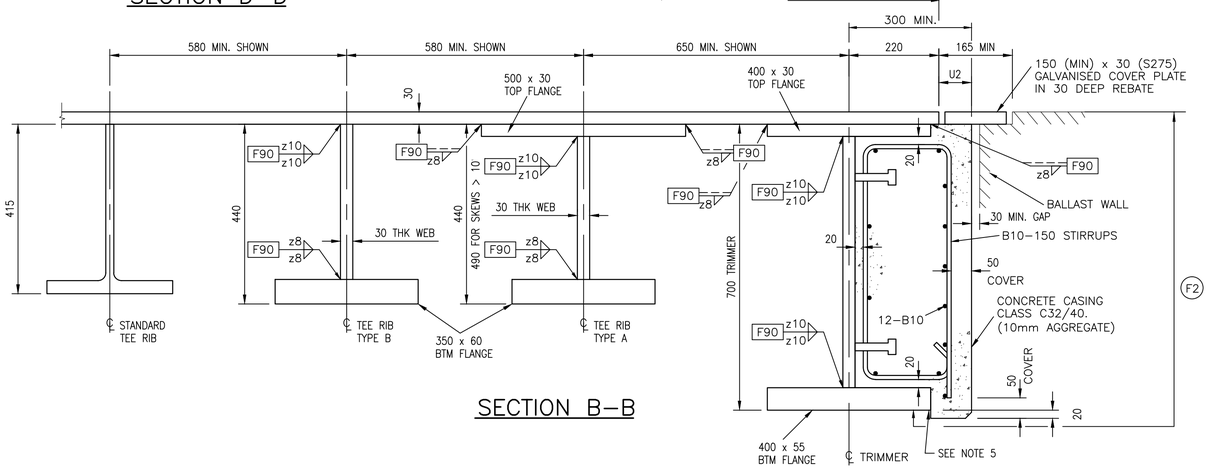

SECTION B–B

1. TEE RIBS SHALL BE FORMED IN ONE LENGTH. INTERMEDIATE WELDED JOINTS ARE NOT PERMITTED.
2. TRIMMER IS FABRICATED INTEGRAL WITH FLOOR UNITS.
3. SEE DRG. No. NR/CIV/SD/1020 FOR LOCATION OF FLOOR PLATE BUTT WELDS.
4. ALL CONCRETE CHAMFERS TO BE 15 x 15 UNLESS NOTED OTHERWISE.
5. FOR DETAILS AT CONCRETE TO STEEL INTERFACES SEE DRG. Nos. NR/CIV/SD/1140 & NR/CIV/SD/1141

Rev	Date	Description of revision	Design'd	C'kd
B	Dec 10	EUROCODE ISSUE	CH	MM
A	Dec 09	ORIGINAL ISSUE	CH	MM

Network Rail
Network Rail Infrastructure Ltd
Registered Office:
Kings Place
90 York Way
London
N1 9AG

	Name	Position	Signature	Date
Approved	P Clark	Senior Programme Engineering Manager (Building & Civils)	P.C.	Dec–10

Master copy with original signatures held by Network Rail HQ
CIVIL ENGINEERING STANDARD DESIGN

© COPYRIGHT NETWORK RAIL 2009

STANDARD HALF THROUGH UNDERBRIDGES
BOX GIRDERS & TRANSVERSE RIBBED FLOORS

DOUBLE TRACK – 2 GIRDERS
WIDE FLOORS 0° SKEW

SHEET 2 OF 2

Scale	1:25, 1:7.5, 1:2
Drawing Number	NR/CIV/SD/1021 B

Full document details: NR NR-CIV-SD-1021 ISSUE B 2010
Documents Document Sharing Hub
Licensee:nelson.wilson.uc:(0184102) User:sam. allnutt
Copyright Network Rail
Provided by IHS under licence with Network Rail
No reproduction or networking permitted without licence from IHS