The following information is associated with Network Rail Standard:
NR CIV/SD/1025 Rev A

Additional Content Access

Click the link below to access CAD version of this drawing.

CAD Drawing

- CIV/SD/1025

If you have any questions, or need assistance, please contact **IHS Support**

Information accessed via the links above is the property of the Copyright holder

IHS Additional Content Page

Documents
Document Sharing Hub

Copyright Network Rail
Provided by IHS under license with Network Rail
No reproduction or networking permitted without license from IHS
Full document details: NR NR-CIV-SD-1025 ISSUE B 2010

Licensee=Weston Williamson/5989497001, User=sam, albett
Not for Resale, 03/27/2016 21:05:21 MDT

DRAWING No. NR/CIV/SD/1025

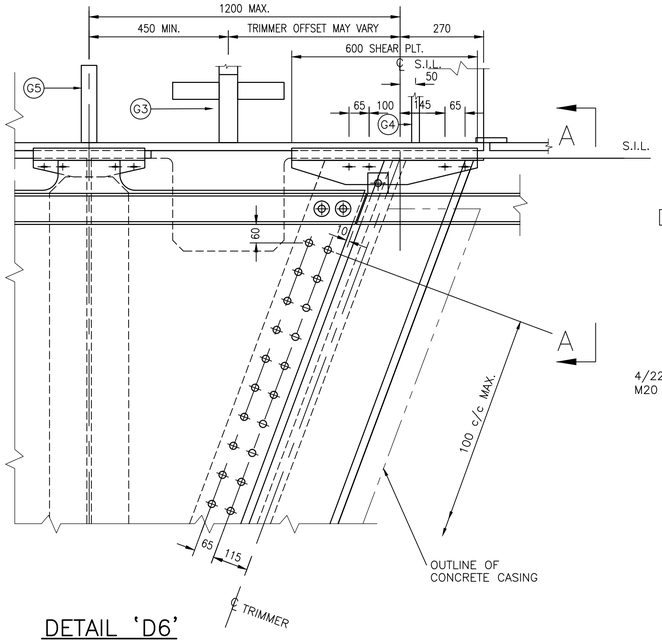

DETAIL 'D6'

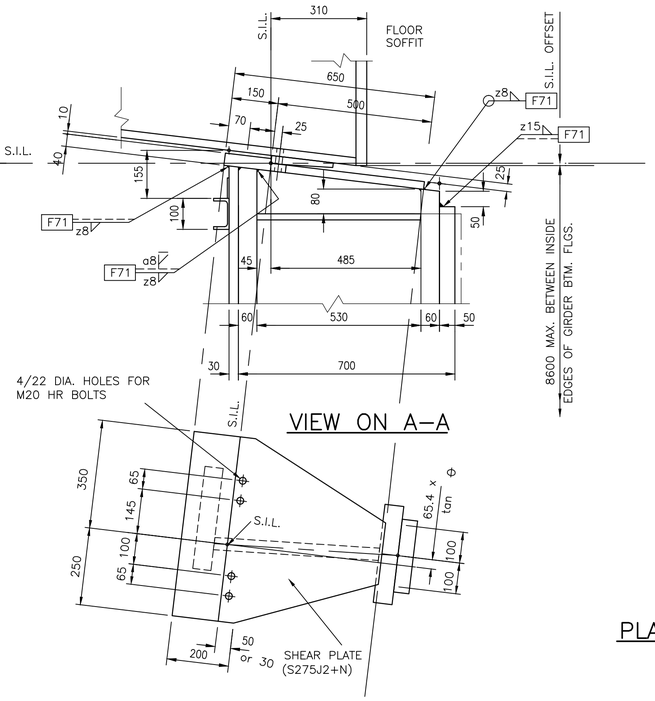

VIEW ON A–A

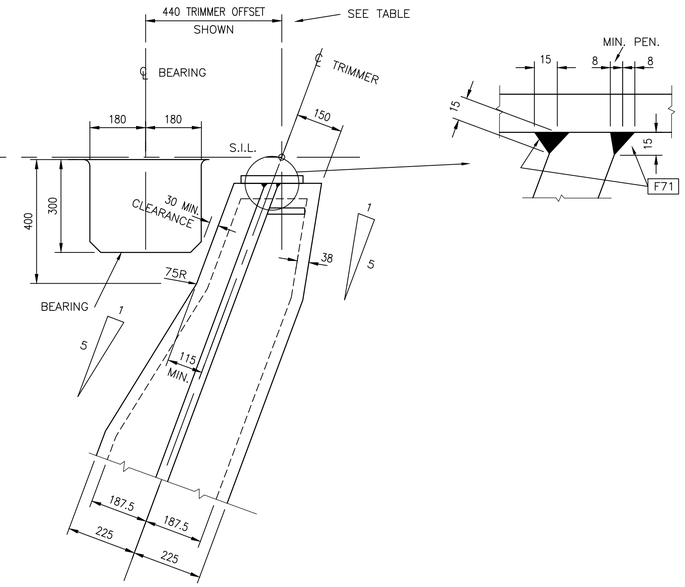

PLAN ON BOTTOM FLANGE/DOUBLER

TRIMMER SKEW ANGLE Φ	MINIMUM TRIMMER OFFSET
20	440
25	480
30	520

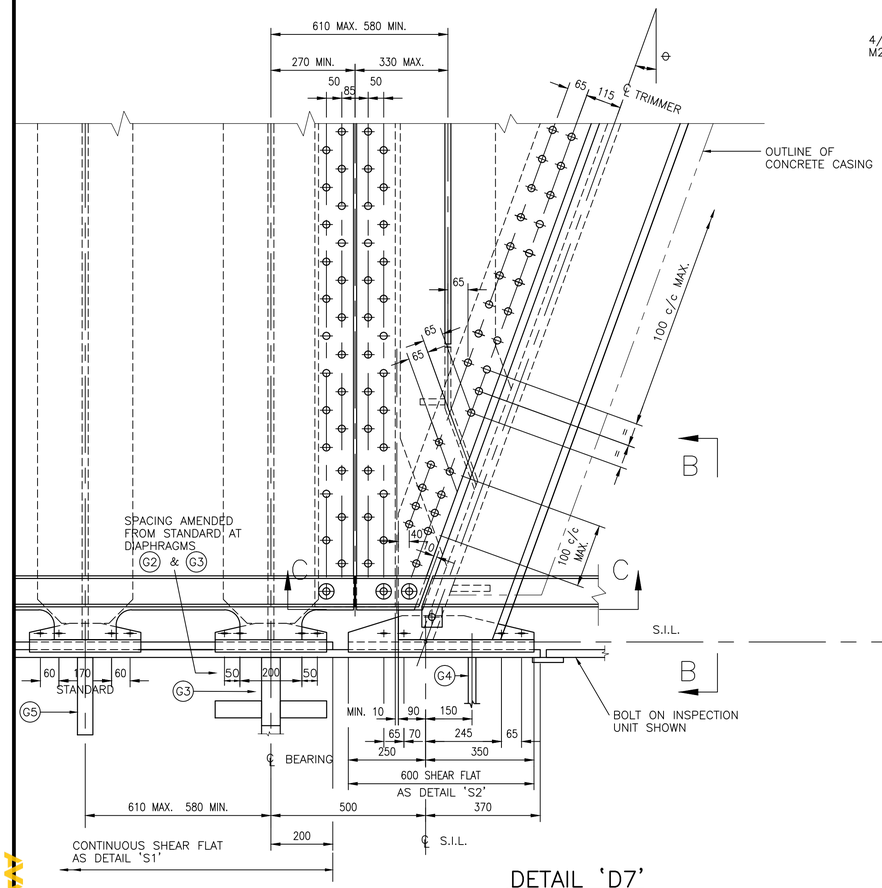

DETAIL 'D7'

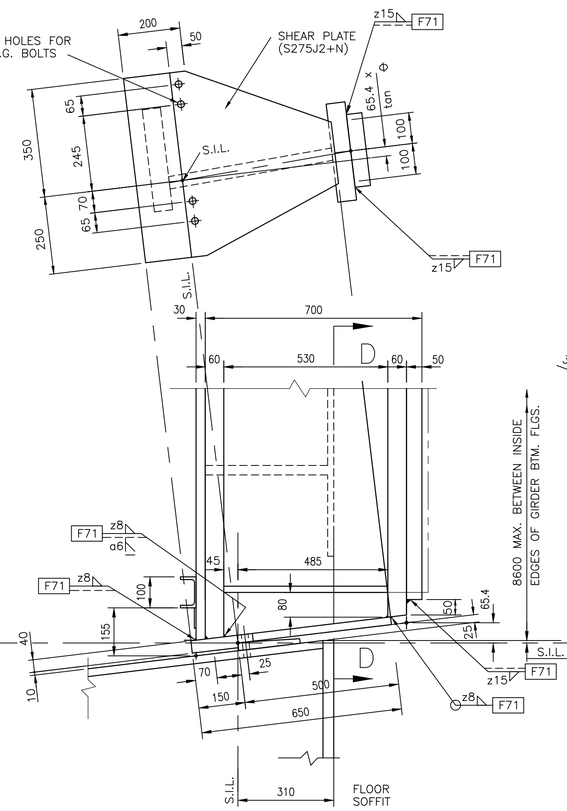

VIEW ON B–B

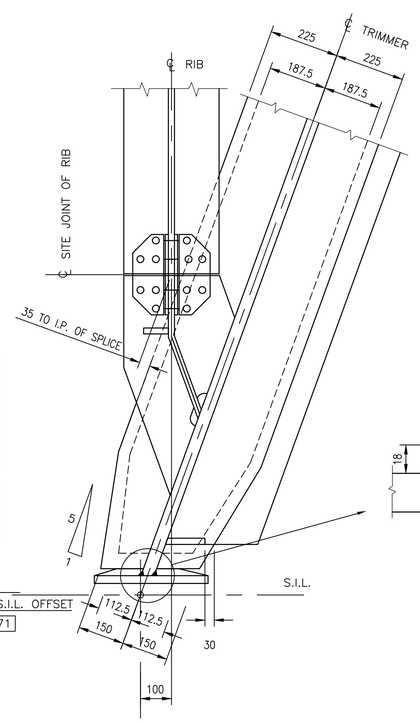

PLAN ON D–D
AT FLOOR SOFFIT LEVEL

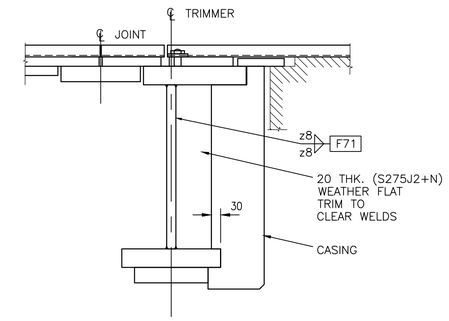

SECTION C–C

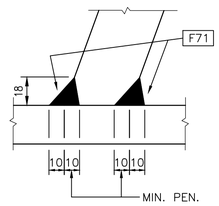

1. TEE RIBS SHALL BE FORMED IN ONE LENGTH. INTERMEDIATE WELDED JOINTS ARE NOT PERMITTED.
2. FOR RIB/TRIMMER CONNECTIONS SEE DRG. No. NR/CIV/SD/1039.
3. THE BOLTED CONNECTIONS SHOWN MAY BE DELETED WHERE APPROVAL IS GIVEN FOR THE TRIMMER & END FLOORING UNITS TO BE DELIVERED AS ONE ELEMENT.

Rev	Date	Description of revision	Design'd	C'kd
B	Dec 10	EUROCODE ISSUE	CH	MM
A	Dec 09	ORIGINAL ISSUE	CH	MM

Network Rail

Network Rail Infrastructure Ltd
Registered Office:
Kings Place
90 York Way
London
N1 9AG

Approved	P Clark	Senior Programme Engineering Manager (Building & Civils)	P.C.	Dec–10
	Name	Position	Signature	Date

Master copy with original signatures held by Network Rail HQ
CIVIL ENGINEERING STANDARD DESIGN

© COPYRIGHT NETWORK RAIL 2009

STANDARD HALF THROUGH UNDERBRIDGES BOX GIRDERS & TRANSVERSE RIBBED FLOORS

DOUBLE TRACK – 2 GIRDERS

WIDE FLOORS >20°–30° SKEW
SHEET 2 OF 4

Scale	1:10, 1:2	
Drawing Number	NR/CIV/SD/1025	B

Full document details: NR NR-CIV-SD-1025 ISSUE B 2010
Documents Document Sharing Hub
Licensee:Wesgro Williams;c=GB;dc=DVO1. Date/time:2009.09.24 09:00:00. User:sam. eRef:
Copyright Network Rail
Provided by IHS under licence with Network Rail
Reproduced on behalf of Network Rail. Single copy licence from IHS