Supplementary Information

The following information is associated with Network Rail Standard:
NR CIV/SD/1029 Rev B

Additional Content Access

Click the link below to access CAD version of this drawing.

CAD Drawing

- CIV/SD/1029

If you have any questions, or need assistance, please contact **IHS Support**

Information accessed via the links above is the property of the Copyright holder

IHS Additional Content Page

Documents
Document Sharing Hub

Copyright Network Rail
Provided by IHS under license with Network Rail
No reproduction or networking permitted without license from IHS
Full document details: NR NR-CIV-SD-1029 ISSUE B 2010

Licensee=Weston Williamson/5989497001, User=sam, albett
Not for Resale, 03/27/2016 21:05:12 MDT

DRAWING No. NR/CIV/SD/1029

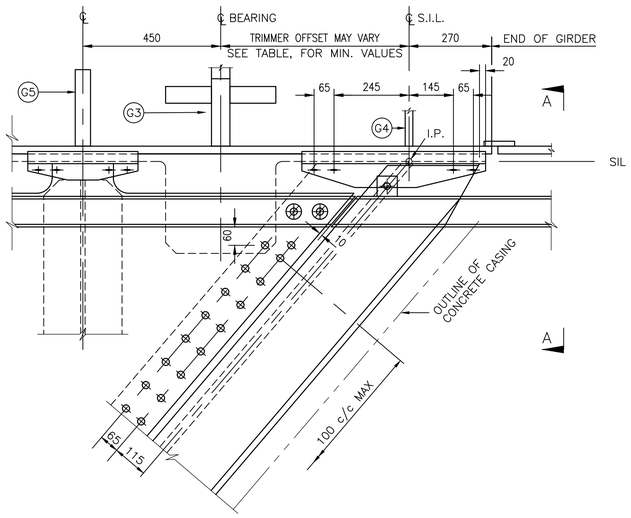

DETAIL 'D11'

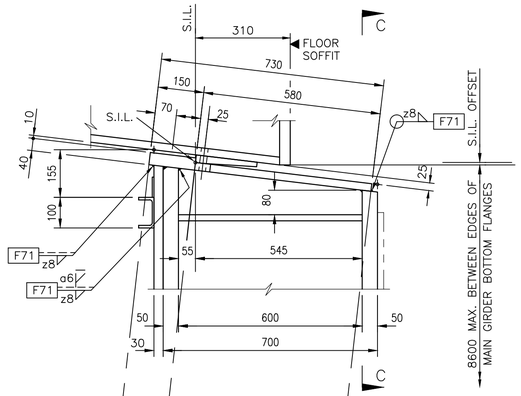

VIEW ON A–A

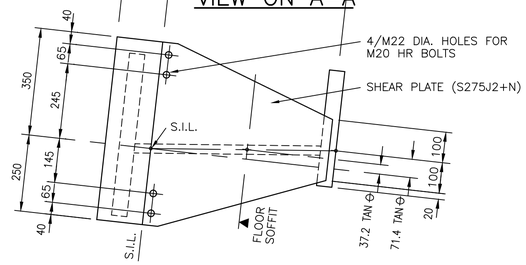

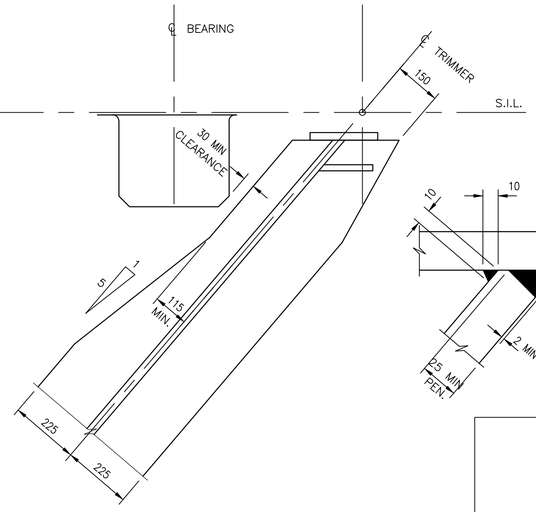

PLAN ON BOTTOM FLANGE C–C

TRIMMER SKEW ANGLE Θ	MINIMUM TRIMMER OFFSET
30	520
35	560
40	615

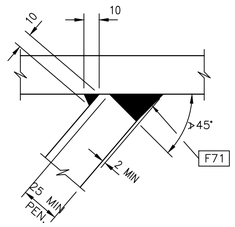

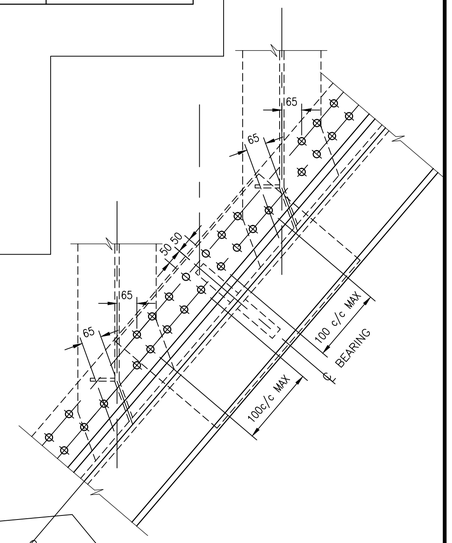

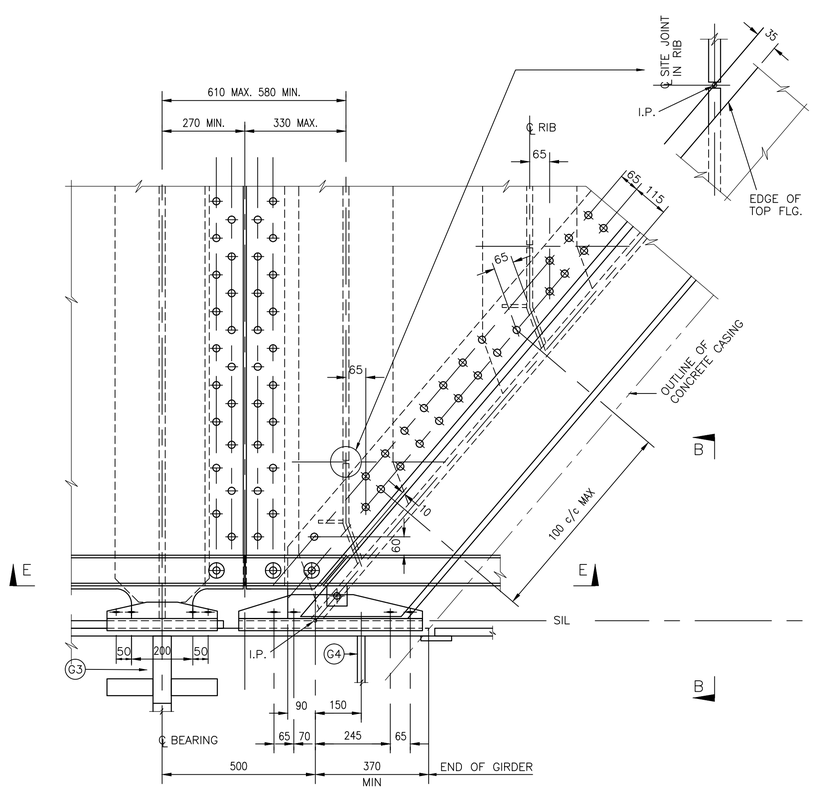

DETAIL 'D12'

40° BRIDGE SKEW (∝) DRAWN

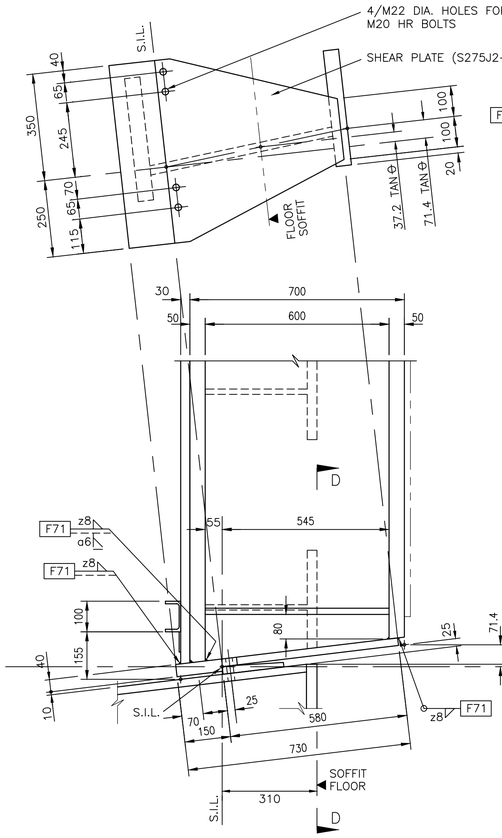

VIEW ON B–B

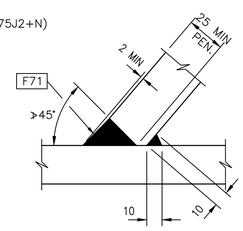

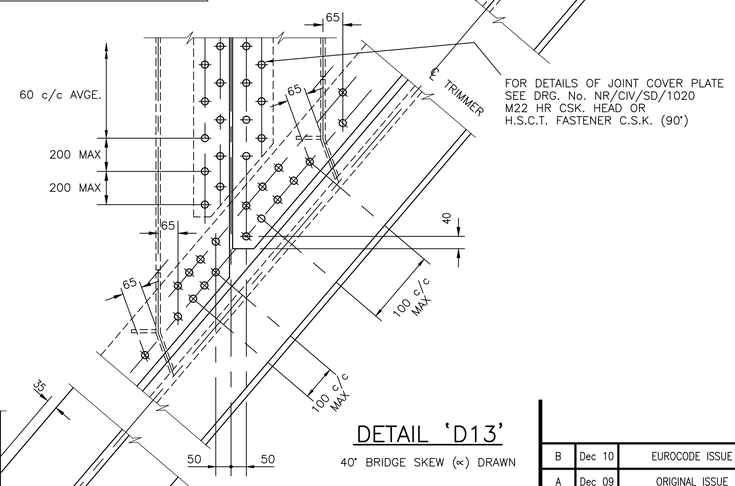

FOR DETAILS OF JOINT COVER PLATE SEE DRG. No. NR/CIV/SD/1020 M22 HR CSK. HEAD OR H.S.C.T. FASTENER C.S.K. (90°)

DETAIL 'D13'

40° BRIDGE SKEW (∝) DRAWN

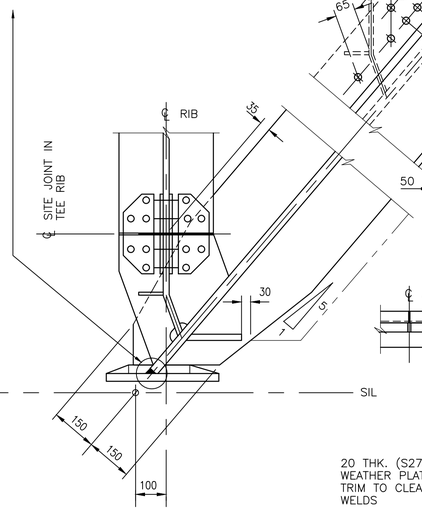

SECTION D–D

AT FLOOR SOFFIT LEVEL

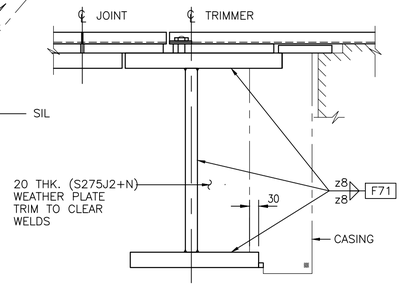

SECTION E–E

1. TEE RIBS SHALL BE FORMED IN ONE LENGTH. INTERMEDIATE WELDED JOINTS ARE NOT PERMITTED.
2. FOR RIB/TRIMMER CONNECTIONS SEE DRG. No. NR/CIV/SD/1039.
3. THE BOLTED CONNECTIONS SHOWN MAY BE DELETED WHERE APPROVAL IS GIVEN FOR THE TRIMMER AND END FLOOR UNITS TO BE DELIVERED AS ONE ELEMENT.
4. HIGH STRENGTH CLAMP TYPE (H.S.C.T.) FASTENERS TO HAVE STRENGTH AND PERFORMANCE EQUIVALENT TO SPECIFIED HR BOLTS AND ARE TO BE APPROVED BY THE ENGINEER. HOLE DIAMETERS TO BE MODIFIED TO SUIT H.S.C.T. FASTENERS AS REQUIRED.

Rev	Date	Description of revision	Design'd	C'kd
B	Dec 10	EUROCODE ISSUE	CH	MM
A	Dec 09	ORIGINAL ISSUE	CH	MM

Network Rail

Network Rail Infrastructure Ltd
Registered Office:
Kings Place
90 York Way
London
N1 9AG

Approved	P Clark	Senior Programme Engineering Manager (Building & Civils)	P.C.	Dec–10
	Name	Position	Signature	Date

Master copy with original signatures held by Network Rail HQ CIVIL ENGINEERING STANDARD DESIGN

© COPYRIGHT NETWORK RAIL 2009

STANDARD HALF THROUGH UNDERBRIDGES BOX GIRDERS & TRANSVERSE RIBBED FLOORS

DOUBLE TRACK – 2 GIRDERS

WIDE FLOOR >30°–55° SKEW
SHEET 2 OF 4

Scale	1:10	
Drawing Number	NR/CIV/SD/1029	B

Full document details: NR NR-CIV-SD-1029 ISSUE B 2010
Documents SharePoint Hub
Licensee=Atkins Willbroad/5994100, User=sam, sfnet
Copyright Network Rail
Provided by IHS under licence with Network Rail
No reproduction or networking permitted without license from IHS