Supplementary Information

The following information is associated with Network Rail Standard:
**NR CIV/SD/1037** Rev B

## Additional Content Access

Click the link below to access CAD version of this drawing.

### CAD Drawing

- CIV/SD/1037

If you have any questions, or need assistance, please contact **IHS Support**

Information accessed via the links above is the property of the Copyright holder

**IHS Additional Content Page**

Documents
Document Sharing Hub

Copyright Network Rail
Provided by IHS under license with Network Rail
No reproduction or networking permitted without license from IHS
Full document details: NR NR-CIV-SD-1037 ISSUE B 2010

Licensee=Weston Williamson/5989497001, User=sam, albett
Not for Resale, 03/27/2016 21:05:42 MDT

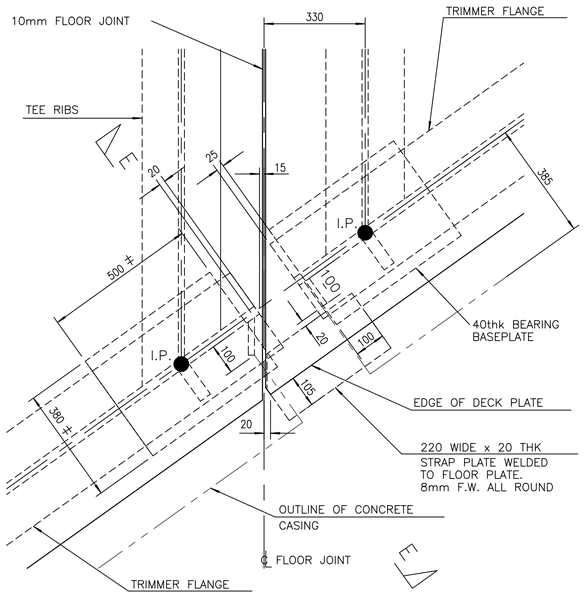


## TYPICAL STRAP PLATE DETAIL 1

SCALE 1:10

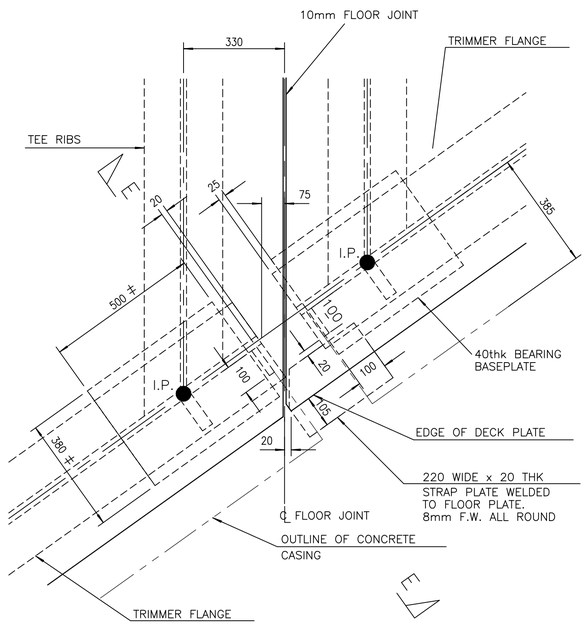


## TYPICAL STRAP PLATE DETAIL 2

SCALE 1:10

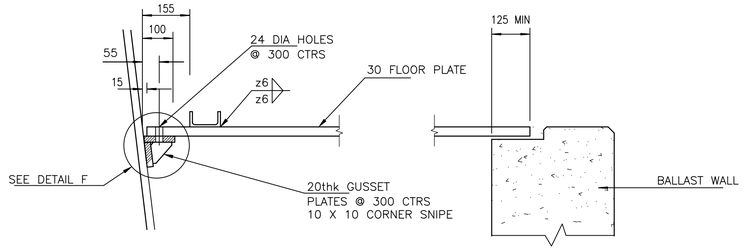


## SECTION C – C

SCALE 1:10

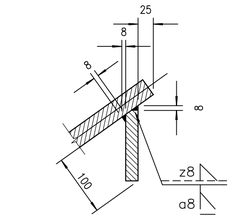


## SKEWED WEATHER FLAT WELD DETAIL

SCALE 1:5

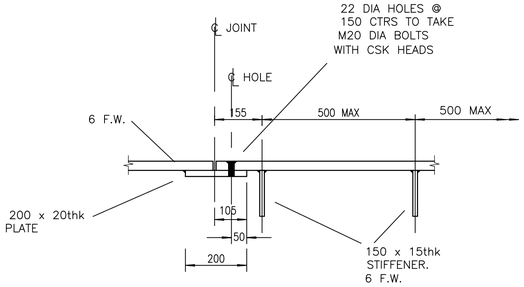


## SECTION D – D

SCALE 1:10

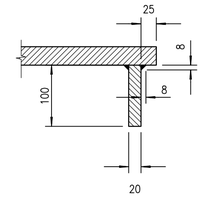


## SQUARE WEATHER FLAT WELD DETAIL

SCALE 1:5

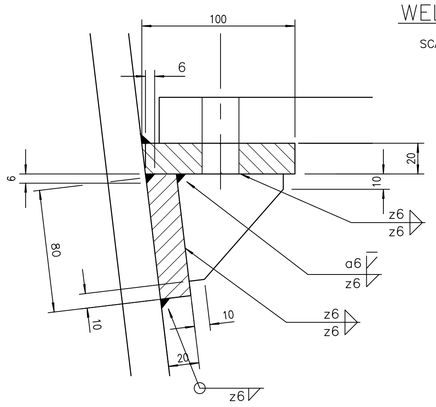


## SUPPLEMENTARY FLOOR PLATE BRACKET DETAIL F

SCALE 1:2

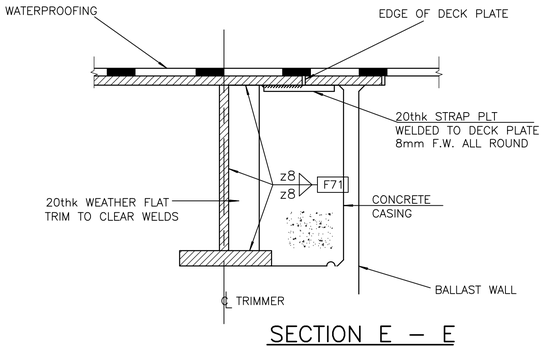


## SECTION E – E

SCALE 1:10

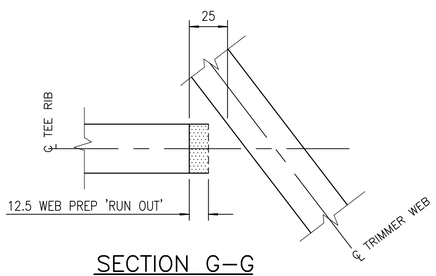


## SECTION G–G

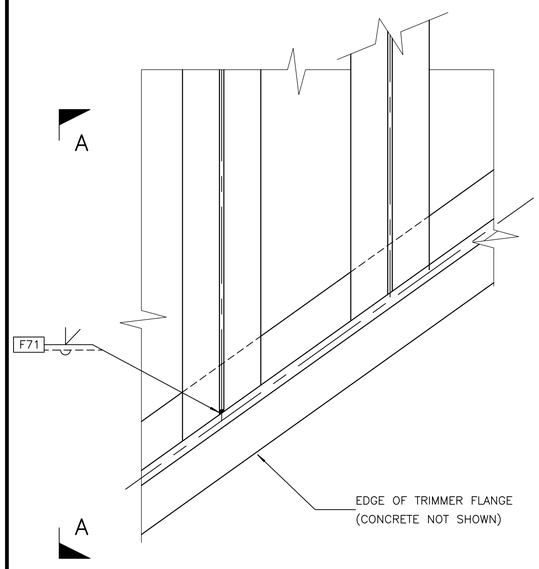


## PLAN ON TRIMMER/TEE RIB CONNECTION BELOW FLOORPLATE LEVEL

SCALE 1:10

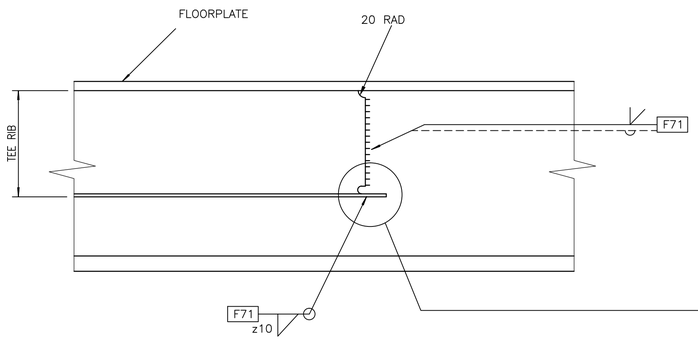


## ELEVATION A – A

SCALE 1:10

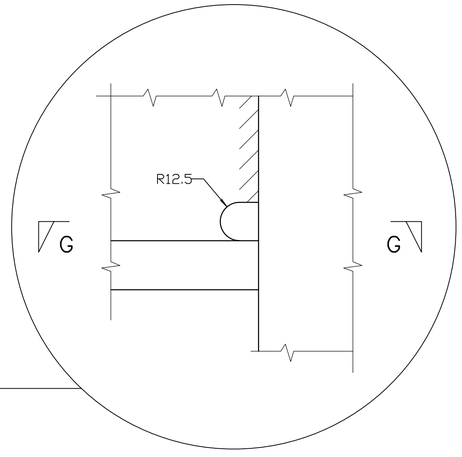


| Rev | Date | Description of revision | Design'd | C'kd |
|---|---|---|---|---|
| B | Dec 10 | EUROCODE ISSUE | CH | MM |
| A | Dec 09 | ORIGINAL ISSUE | CH | MM |

Network Rail

Network Rail Infrastructure Ltd
Registered Office:
Kings Place
90 York Way
London
N1 9AG

| | Name | Position | Signature | Date |
|---|---|---|---|---|
| Approved | P Clark | Senior Programme Engineering Manager (Building & Civils) | P.C. | Dec–10 |

Master copy with original signatures held by Network Rail HQ CIVIL ENGINEERING STANDARD DESIGN

© COPYRIGHT NETWORK RAIL 2009

**STANDARD HALF THROUGH UNDERBRIDGES BOX GIRDERS & TRANSVERSE RIBBED FLOORS**

# DOUBLE TRACK – 2 GIRDERS

**ALTERNATIVE TRIMMER – TYPICAL DETAILS**

**WIDE FLOORS >30° – 40° SKEW**

**WIDE FLOORS >35° – 55° SKEW**

| | |
|---|---|
| Scale | 1:10, 1:5, 1:2 |
| Drawing Number | NR/CIV/SD/1037 B |

Full document details: NR NR-CIV-SD-1037 ISSUE B 2010
Licensee:Halcrow Willbroad(SS6810/02). User:sam. sfirst
Uncontrolled Copy Printed 01/03/2011
Copyright Network Rail
Provided by IHS under licence with Network Rail
To purchase copies of documents contact IHS on 01344 328039
AXA Documents Document Sharing Hub