Supplementary Information

The following information is associated with Network Rail Standard:
**NR CIV/SD/1041** Rev B

## Additional Content Access

Click the link below to access CAD version of this drawing.

### CAD Drawing

- CIV/SD/1041

If you have any questions, or need assistance, please contact **IHS Support**

Information accessed via the links above is the property of the Copyright holder

**IHS Additional Content Page**

Documents
Document Sharing Hub

Copyright Network Rail
Provided by IHS under license with Network Rail
No reproduction or networking permitted without license from IHS
Full document details: NR NR-CIV-SD-1041 ISSUE B 2010

Licensee=Weston Williamson/5989497001, User=sam, albett
Not for Resale, 03/27/2016 21:03:51 MDT

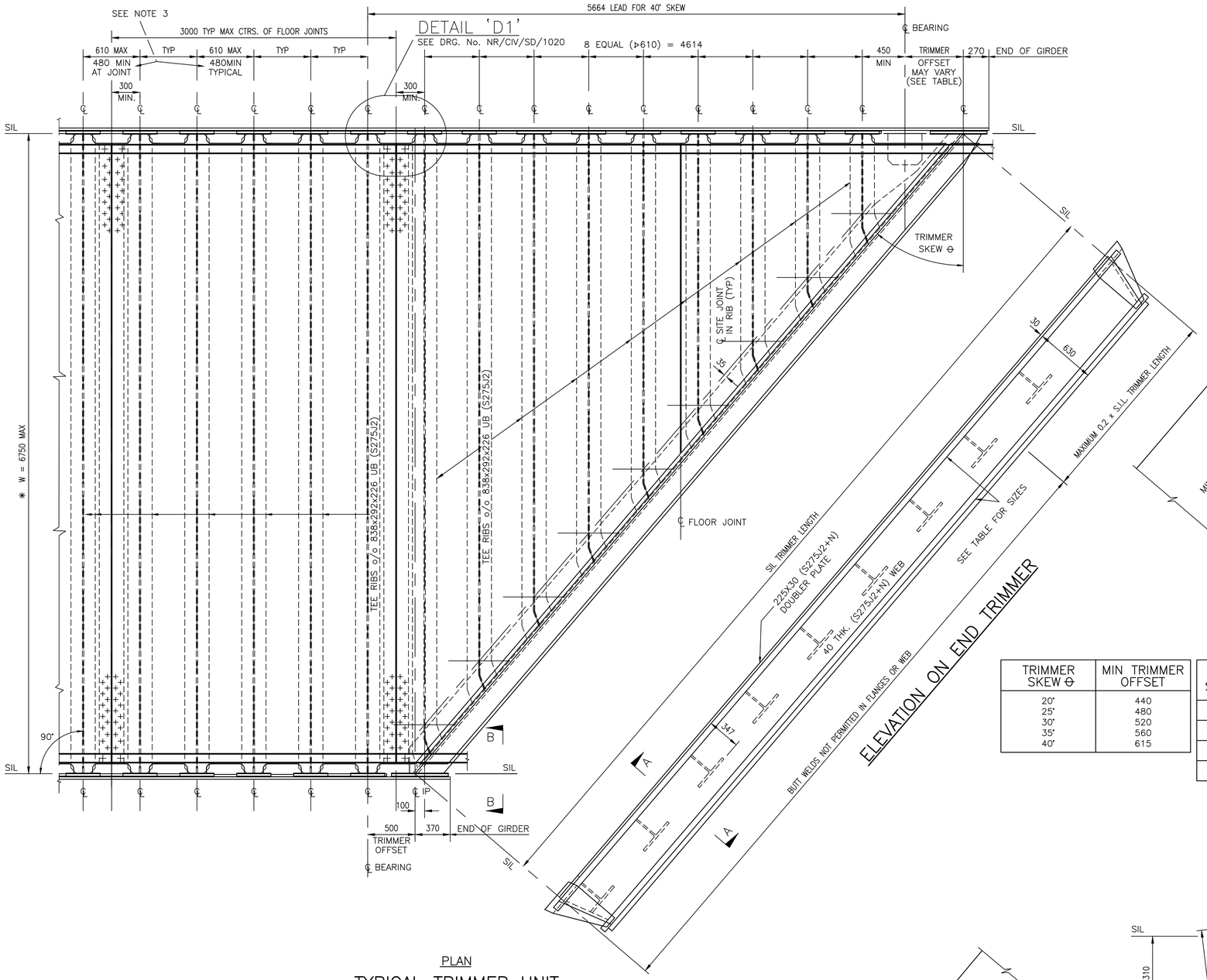


PLAN

## TYPICAL TRIMMER UNIT
## NARROW FLOOR/40° BRIDGE SKEW (∝) DRAWN

## ELEVATION ON END TRIMMER

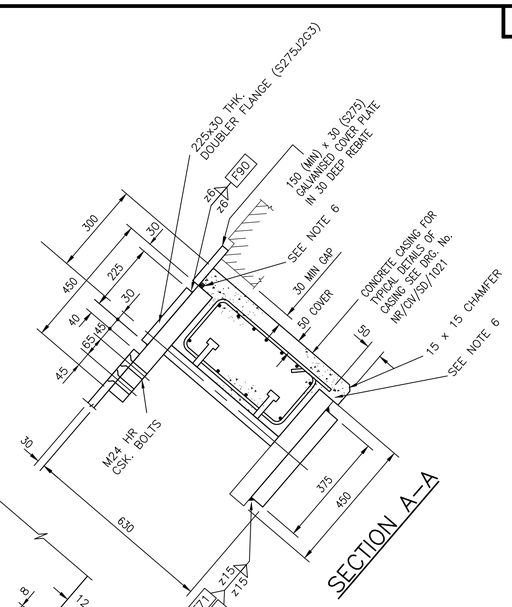


## SECTION A–A

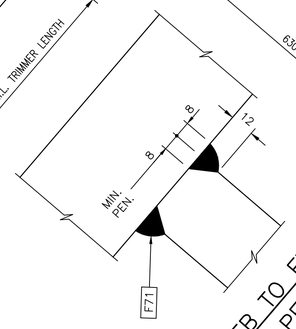


## WEB TO FLANGE WELD PENETRATION

| TRIMMER SKEW Θ | MIN TRIMMER OFFSET |
|---|---|
| 20° | 440 |
| 25° | 480 |
| 30° | 520 |
| 35° | 560 |
| 40° | 615 |

| TRIMMER SIZES (S275J2+N) | BRIDGE SKEW (∝) | |
|---|---|---|
| | >20°–30° | >30°–40° |
| TOP FLANGE | 450 x 40 | 450 x 60 |
| BOTTOM FLANGE | 450 x 45 | 450 x 60 |
| BOTTOM FLANGE DOUBLER | 375 x 45 | 375 x 50 |
| WEB | 500 x 40 | 460 x 40 |

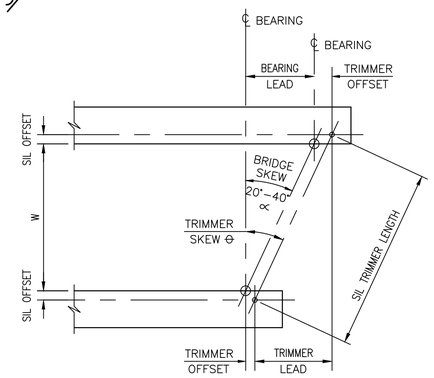


## DEFINITION OF SKEW (NTS)

FOR WORKED EXAMPLE SEE DRG. No. NR/CIV/SD/1024

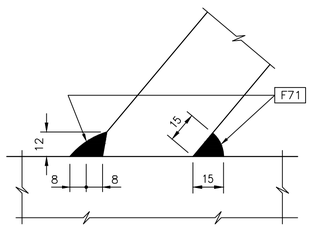


## WEB TO SHEAR PLATE WELD PREPARATION

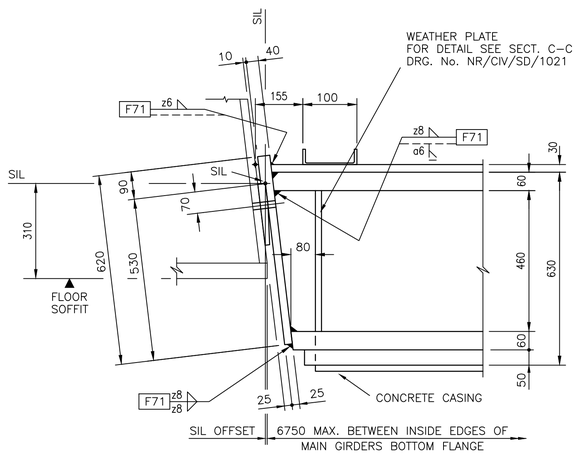


## VIEW ON B–B
(OTHER END SIMILAR)

1. DETAILS GENERALLY SIMILAR TO WIDE FLOORS, UNLESS SHOWN OR STATED OTHERWISE REFER TO DRGS. NR/CIV/SD/1038, NR/CIV/SD/1024, NR/CIV/SD/1025, NR/CIV/SD/1026, NR/CIV/SD/1027
2. TEE RIBS SHALL BE FORMED IN ONE LENGTH. INTERMEDIATE WELDED JOINTS ARE NOT PERMITTED.
3. 480 RIB SPACING IS DESIRABLE MINIMUM TO ALLOW WELDING, PROTECTIVE TREATMENT & MAINTENANCE.
4. THE BOLTED CONNECTIONS SHOWN MAY BE DELETED WHERE APPROVAL IS GIVEN FOR THE TRIMMER & END FLOORING UNIT TO BE DELIVERED AS ONE ELEMENT.
5. SEE DRG. NR/CIV/SD/1020 FOR LOCATION OF FLOOR PLATE BUTT WELD.
6. FOR DETAILS AT CONCRETE TO STEEL INTERFACES SEE DRG. Nos. NR/CIV/SD/1140 & NR/CIV/SD/1141
7. FOR SKEWS > 30° AND WHERE BRIDGE INSTALLATION REQUIRES MULTIPLE DECK UNITS WITH INTEGRAL TRIMMERS SEE DRG. SERIES NR/CIV/SD/1047 TO NR/CIV/SD/1050.

| Rev | Date | Description of revision | Design'd | C'kd |
|---|---|---|---|---|
| B | Dec 10 | EUROCODE ISSUE | CH | MM |
| A | Dec 09 | ORIGINAL ISSUE | CH | MM |

Network Rail

Network Rail Infrastructure Ltd
Registered Office:
Kings Place
90 York Way
London
N1 9AG

| Approved | P Clark | Senior Programme Engineering Manager (Building & Civils) | P.C. | Dec–10 |
|---|---|---|---|---|
| | Name | Position | Signature | Date |

Master copy with original signatures held by Network Rail HQ CIVIL ENGINEERING STANDARD DESIGN

© COPYRIGHT NETWORK RAIL 2009

**STANDARD HALF THROUGH UNDERBRIDGES BOX GIRDERS & TRANSVERSE RIBBED FLOORS**

# DOUBLE TRACK – 2 GIRDERS

## NARROW FLOORS >20° – 40°

| Scale | 1:25, 1:10 | |
|---|---|---|
| Drawing Number | NR/CIV/SD/1041 | B |

Full document details: NR NR-CIV-SD-1041SIUE B 2010
Documents Document Sharing Hub
Copyright Network Rail
Provided by IHS under licence with Network Rail
Licensee=Mapon Willowood/5959100, User=sam, sheet
No reproduction or networking permitted without licence from IHS