Supplementary Information

The following information is associated with Network Rail Standard:
NR CIV/SD/1044 Rev B

Additional Content Access

Click the link below to access CAD version of this drawing.

CAD Drawing

- CIV/SD/1044

If you have any questions, or need assistance, please contact **IHS Support**

Information accessed via the links above is the property of the Copyright holder

IHS Additional Content Page

--`,,,,,,`,,,,,,`,,`,,,,,,,,``-`-`,,`,,`,`,,`---

Documents
Document Sharing Hub

Copyright Network Rail
Provided by IHS under license with Network Rail
No reproduction or networking permitted without license from IHS

Licensee=Weston Williamson/5989497001, User=sam, albett
Not for Resale, 03/27/2016 21:06:29 MDT

Full document details: NR NR-CIV-SD-1044 ISSUE B 2010

Full document details: NR NR-CIV-SD-1044 ISSUE B 2010

DRAWING No. NR/CIV/SD/1044

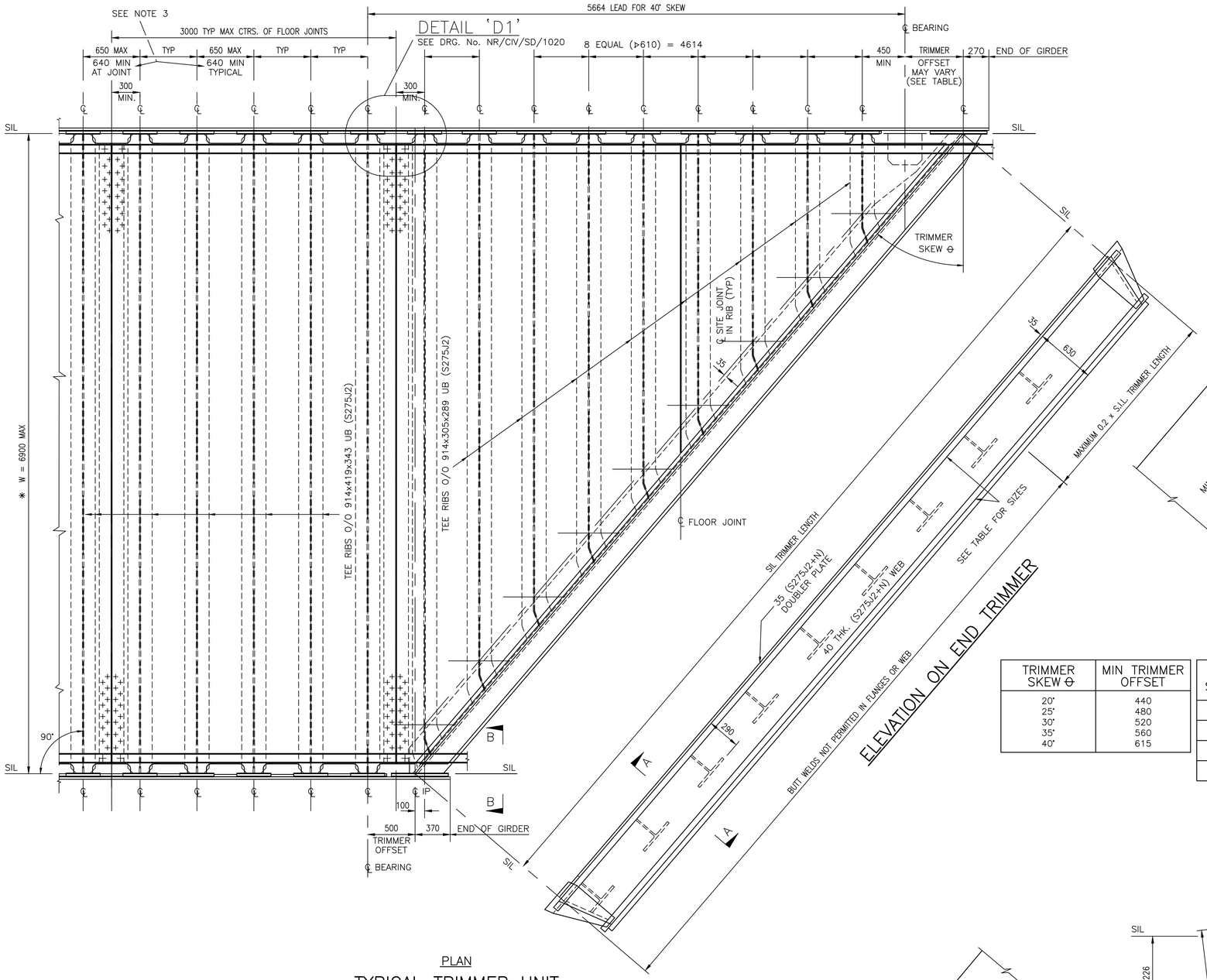

ELEVATION ON END TRIMMER

PLAN

TYPICAL TRIMMER UNIT
NARROW FLOOR/40° BRIDGE SKEW (∝) DRAWN

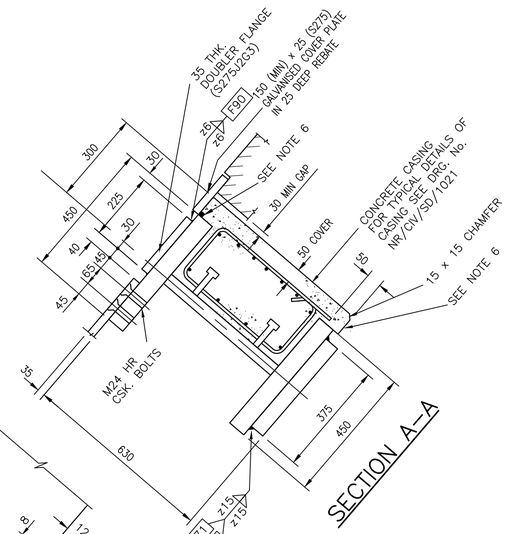

SECTION A–A

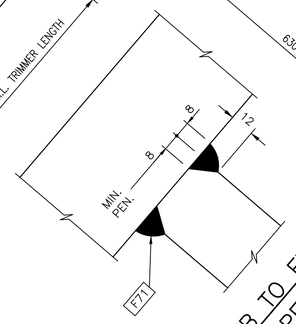

WEB TO FLANGE
WELD PENETRATION

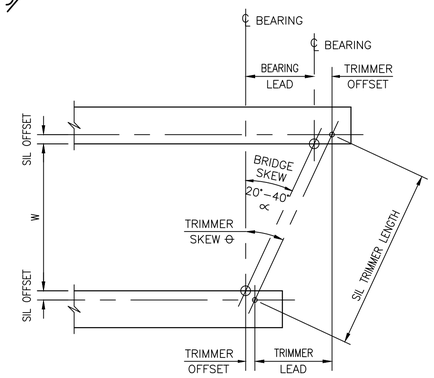

DEFINITION OF SKEW (NTS)

FOR WORKED EXAMPLE SEE DRG. No. NR/CIV/SD/1024

TRIMMER SKEW Θ	MIN TRIMMER OFFSET
20°	440
25°	480
30°	520
35°	560
40°	615

TRIMMER SIZES (S275J2+N)	BRIDGE SKEW (∝)	
	>20°–30°	>30°–40°
TOP FLANGE	450 x 40	450 x 60
BOTTOM FLANGE	450 x 45	450 x 60
BOTTOM FLANGE DOUBLER	375 x 45	375 x 50
WEB	500 x 40	460 x 40

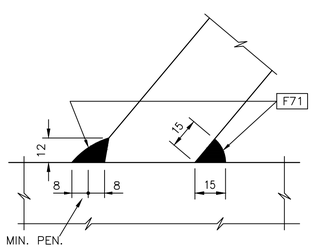

WEB TO SHEAR PLATE
WELD PREPARATION

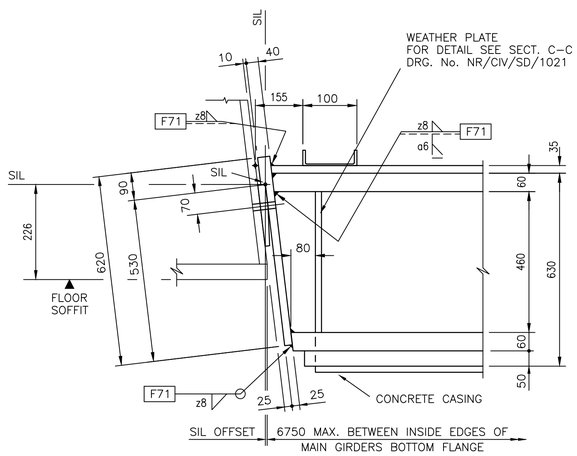

VIEW ON B–B
(OTHER END SIMILAR)

1. DETAILS GENERALLY SIMILAR TO WIDE FLOORS, UNLESS SHOWN OR STATED OTHERWISE REFER TO DRGS. NR/CIV/SD/1038, NR/CIV/SD/1024, NR/CIV/SD/1025, NR/CIV/SD/1026 & NR/CIV/SD/1027.
2. TEE RIBS SHALL BE FORMED IN ONE LENGTH. INTERMEDIATE WELDED JOINTS ARE NOT PERMITTED.
3. 480 RIB SPACING IS DESIRABLE MINIMUM TO ALLOW WELDING, PROTECTIVE TREATMENT & MAINTENANCE.
4. THE BOLTED CONNECTIONS SHOWN MAY BE DELETED WHERE APPROVAL IS GIVEN FOR THE TRIMMER & END FLOORING UNIT TO BE DELIVERED AS ONE ELEMENT.
5. SEE DRG. NR/CIV/SD/1020 FOR LOCATION OF FLOOR PLATE BUTT WELDS.
6. FOR DETAILS AT CONCRETE TO STEEL INTERFACES SEE DRG. Nos. NE/CIV/SD/1140 & NE/CIV/SD/1141
7. FOR SKEWS > 30° AND WHERE BRIDGE INSTALLATION REQUIRES MULTIPLE DECK UNITS WITH INTEGRAL TRIMMERS SEE DRG. SERIES NR/CIV/SD/1047 TO NR/CIV/SD/1050.

Rev	Date	Description of revision	Design'd	C'kd
B	Dec 10	EUROCODE ISSUE	CH	MM
A	Dec 09	ORIGINAL ISSUE	CH	MM

Network Rail

Network Rail Infrastructure Ltd
Registered Office:
Kings Place
90 York Way
London
N1 9AG

Approved	P Clark	Senior Programme Engineering Manager (Building & Civils)	P.C.	Dec–10
	Name	Position	Signature	Date

Master copy with original signatures held by Network Rail HQ CIVIL ENGINEERING STANDARD DESIGN

© COPYRIGHT NETWORK RAIL 2009

STANDARD HALF THROUGH UNDERBRIDGES
BOX GIRDERS & TRANSVERSE RIBBED FLOORS

DOUBLE TRACK – 2 GIRDERS SHALLOW NARROW FLOORS >20° – 40°

Scale	1:25, 1:10	
Drawing Number	NR/CIV/SD/1044	B

Documents Sharing Hub
Copyright Network Rail
Provided by IHS under licence with Network Rail
No reproduction or networking permitted without licence from IHS
Licensee=Mangan Williams/2056981001, User=sam, allan
Not for resale, 2010-10-27 07:00:59 MDT