Supplementary Information

The following information is associated with Network Rail Standard:
NR CIV/SD/1046 Rev B

Additional Content Access

Click the link below to access CAD version of this drawing.

CAD Drawing

- CIV/SD/1046

If you have any questions, or need assistance, please contact **IHS Support**

Information accessed via the links above is the property of the Copyright holder

IHS Additional Content Page

Documents
Document Sharing Hub

Copyright Network Rail
Provided by IHS under license with Network Rail
No reproduction or networking permitted without license from IHS
Full document details: NR NR-CIV-SD-1046 ISSUE B 2010

Licensee=Weston Williamson/5989497001, User=sam, albett
Not for Resale, 03/27/2016 21:05:57 MDT

DRAWING No. NR/CIV/SD/1046

SHALLOW NARROW FLOORS – 290 DEEP RIBS

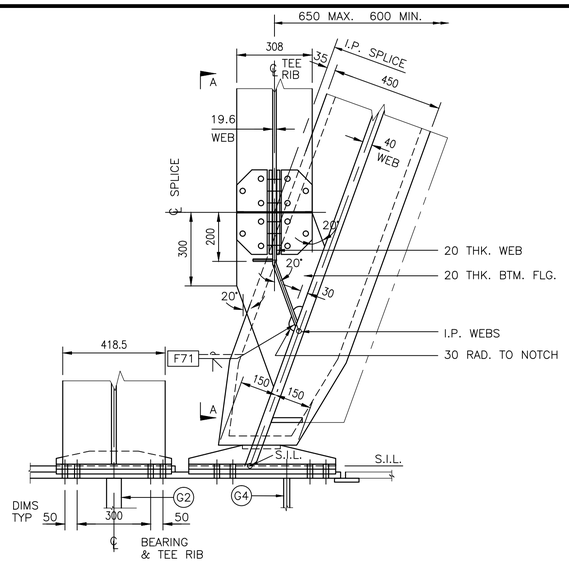

DETAIL AT OBTUSE CORNER
>20° to 30° SKEW
20° SKEW SHOWN

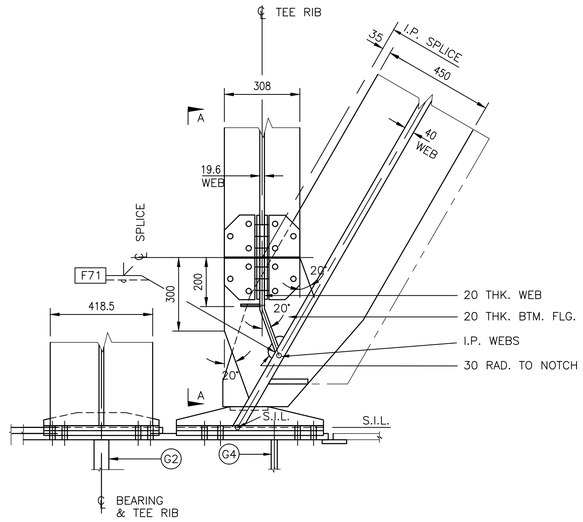

DETAIL AT OBTUSE CORNER
>30° to 40° SKEW
30° SKEW SHOWN

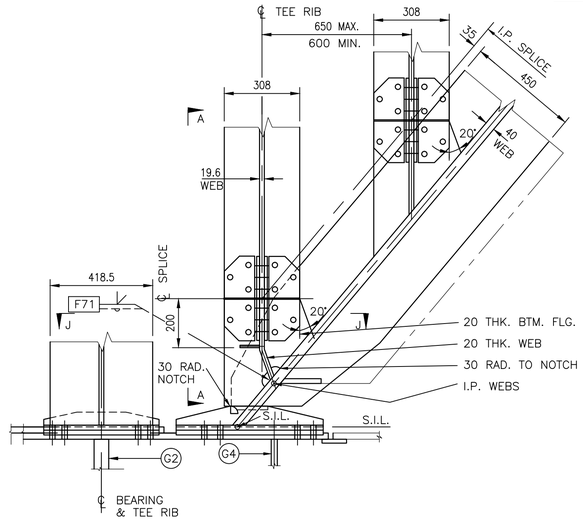

DETAIL AT OBTUSE CORNER
>40° to 55° SKEW
40° SKEW SHOWN

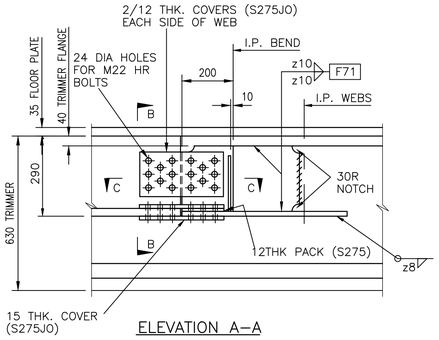

ELEVATION A–A

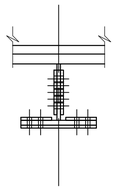

SECTION B–B

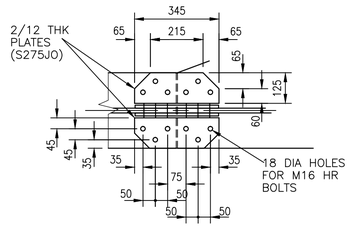

PLAN ON C–C

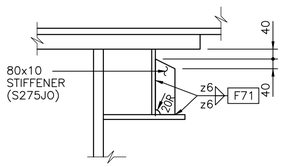

SECTION J–J

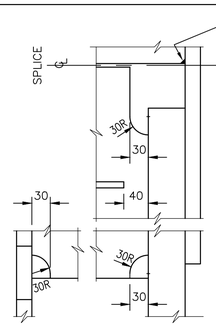

SECTION G–G

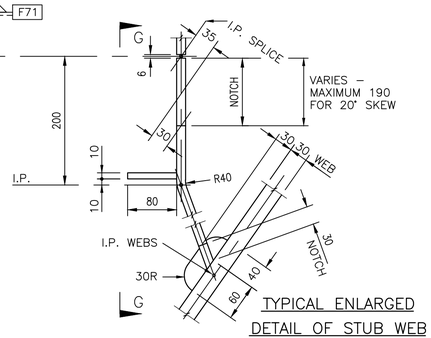

TYPICAL ENLARGED DETAIL OF STUB WEB

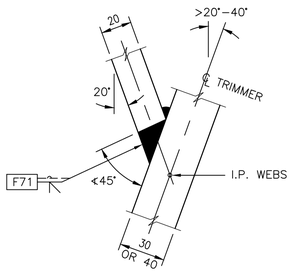

DETAIL @ I.P. OF WEBS
>20° to 40° SKEWS (20° SHOWN)

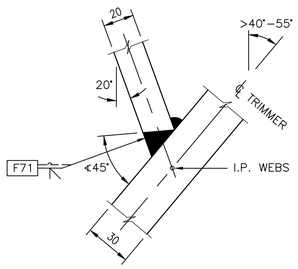

DETAIL @ I.P. OF WEBS
>40° to 55° SKEWS (40° SHOWN)

1. NO WELDING SHALL BE PERMITTED TO LOOSE COVERS.
2. LOOSE COVERS TO BE GRADE S275JO <S275J2+N>. ALL OTHER STEEL TO BE GRADE S275J2+N UNLESS STATED OTHERWISE.
3. ALL BOLTS TO RIB/TRIMMER CONNECTIONS TO BE M20 HR U.N.O.
4. THE BOLTED CONNECTIONS SHOWN MAY BE DELETED WHERE APPROVAL IS GIVEN FOR THE TRIMMER & END FLOORING UNIT TO BE DELIVERED AS ONE ELEMENT.

Rev	Date	Description of revision	Design'd	C'kd
B	Dec 10	EUROCODE ISSUE	CH	MM
A	Dec 09	ORIGINAL ISSUE	CH	MM

Network Rail

Network Rail Infrastructure Ltd
Registered Office:
Kings Place
90 York Way
London
N1 9AG

Approved	P Clark	Senior Programme Engineering Manager (Building & Civils)	P.C.	Dec–10
	Name	Position	Signature	Date

Master copy with original signatures held by Network Rail HQ CIVIL ENGINEERING STANDARD DESIGN

© COPYRIGHT NETWORK RAIL 2009

STANDARD HALF THROUGH UNDERBRIDGES
BOX GIRDERS & TRANSVERSE RIBBED FLOORS

DOUBLE TRACK – 2 GIRDERS
SHALLOW NARROW FLOORS
RIB/TRIMMER CONNECTIONS >20°–55° SKEW

Scale	1:12.5, 1:5, 1:2	
Drawing Number	NR/CIV/SD/1046	B

Full document details: NR NR-CIV-SD-1046 ISSUE B 2010
Licensed Region Wilmington(DS9R1X0). User:sam. sfrett
Uncontrolled Copy
Copyright Network Rail
Provided by IHS under licence with Network Rail
Reproduced by permission of Network Rail. No further reproduction or distribution without prior written permission from IHS
AVA Documents Standard Hub