Supplementary Information

The following information is associated with Network Rail Standard:
NR CIV/SD/1048 Rev B

Additional Content Access

Click the link below to access CAD version of this drawing.

CAD Drawing

- CIV/SD/1048

If you have any questions, or need assistance, please contact **IHS Support**

Information accessed via the links above is the property of the Copyright holder

IHS Additional Content Page

Documents
Document Sharing Hub

Copyright Network Rail
Provided by IHS under license with Network Rail
No reproduction or networking permitted without license from IHS
Full document details: NR NR-CIV-SD-1048 ISSUE B 2010

Licensee=Weston Williamson/5989497001, User=sam, albett
Not for Resale, 03/27/2016 21:05:55 MDT

DRAWING No. NR/CIV/SD/1048

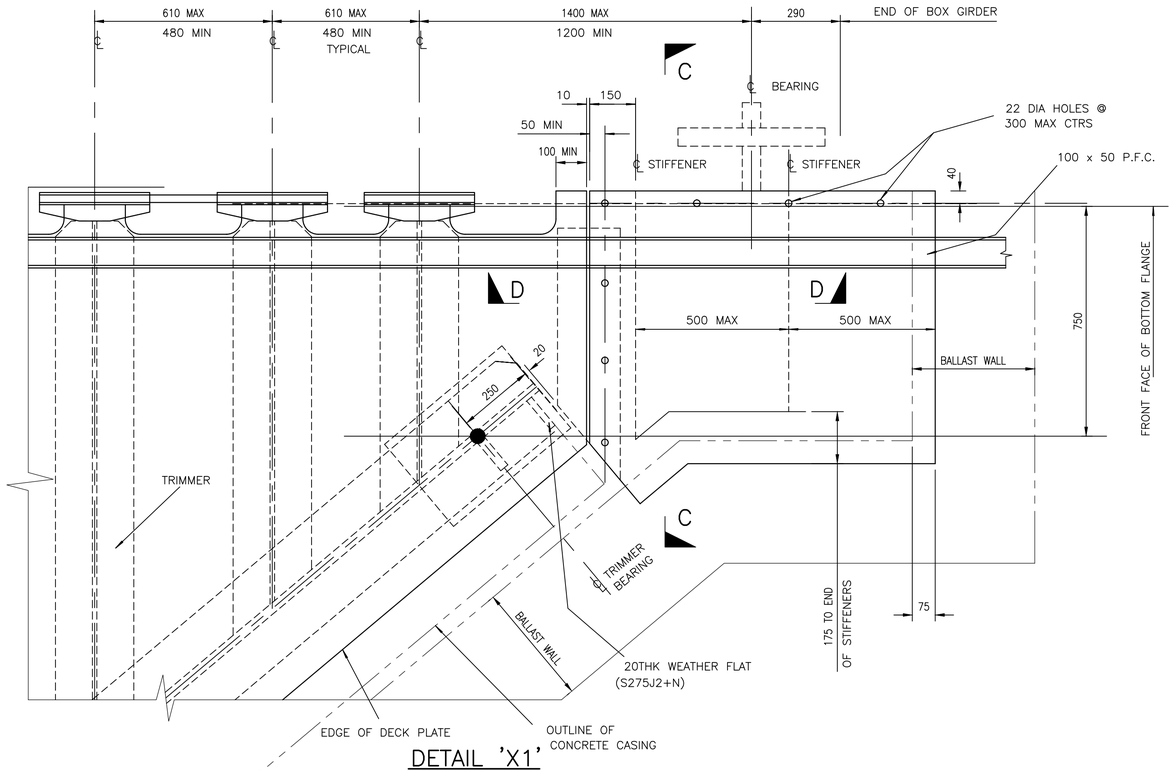

DETAIL 'X1'

SCALE 1:10

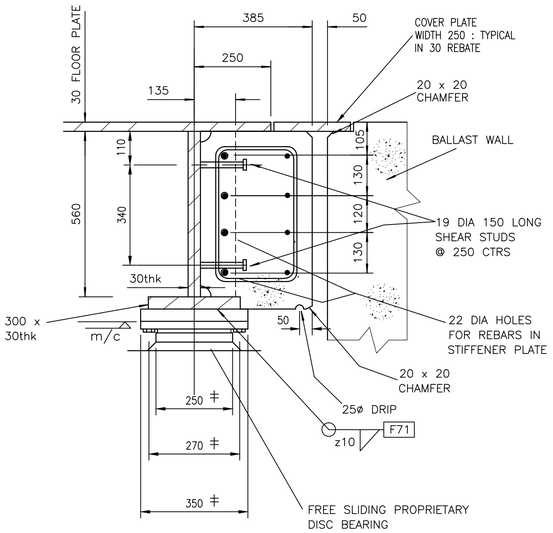

SECTION A – A

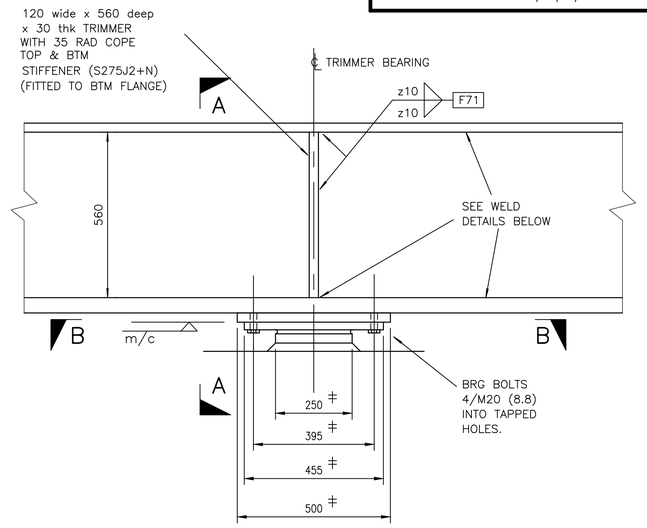

TRIMMER BEARING DETAIL

SCALE 1:10

ELEVATION

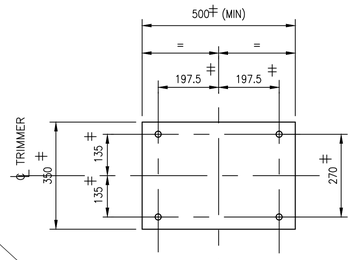

PLAN B – B

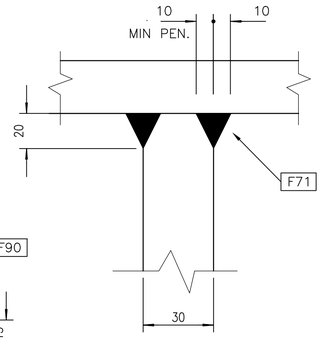

WEB TO TOP FLANGE DETAIL

SCALE 1:2

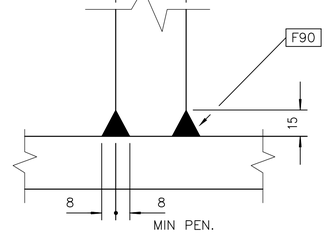

WEB TO BOTTOM FLANGE DETAIL

SCALE 1:2

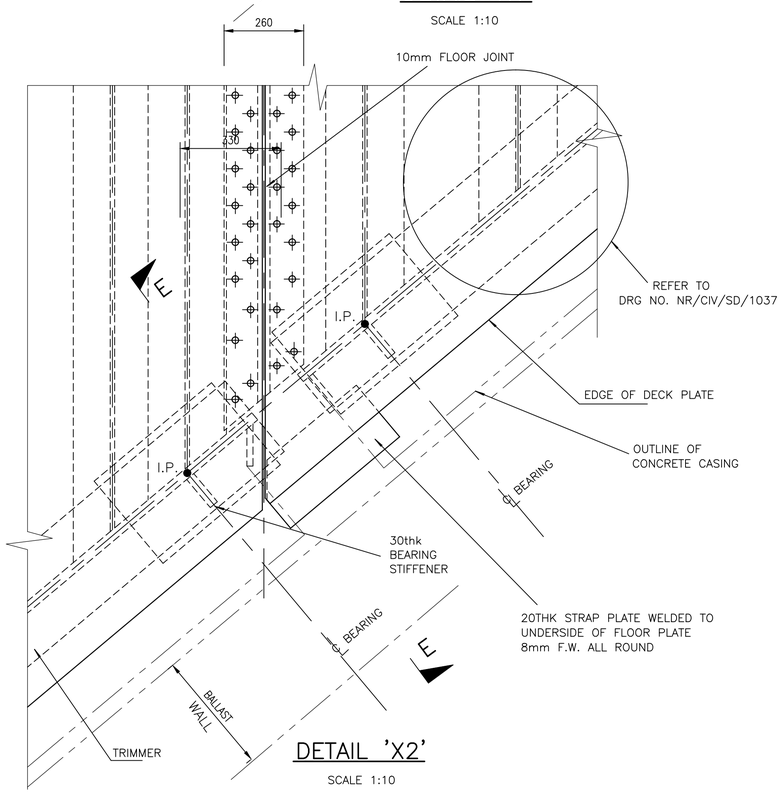

DETAIL 'X2'

SCALE 1:10

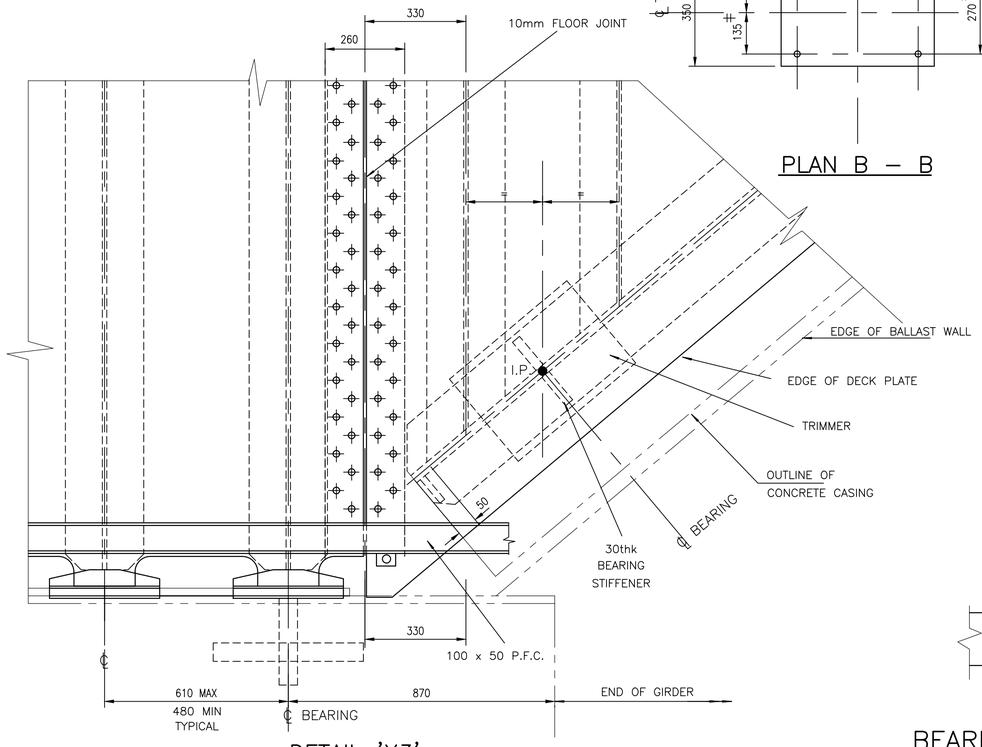

DETAIL 'X3'

SCALE 1:10

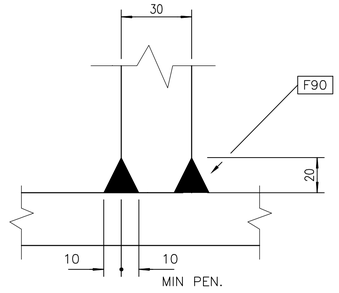

BEARING STIFFENER TO BOTTOM FLANGE DETAIL

SCALE 1:2

1. DIMENSIONS THUS ‡ DEPEND UPON BEARINGS AND MUST BE CHECKED WITH MANUFACTURER.
2. TEE RIBS SHALL BE FORMED IN ONE LENGTH, INTERMEDIATE WELDED JOINTS ARE NOT PERMITTED.
3. FOR SECTIONS C–C, D–D, E–E AND DETAIL 'X' REFER TO DRG No. NR/CIV/SD/1037.

Rev	Date	Description of revision	Design'd	C'kd
B	Dec 10	EUROCODE ISSUE	CH	MM
A	Dec 09	ORIGINAL ISSUE	CH	MM

Network Rail

Network Rail Infrastructure Ltd
Registered Office:
Kings Place
90 York Way
London
N1 9AG

Approved	P Clark	Senior Programme Engineering Manager (Building & Civils)	P.C.	Dec–10
	Name	Position	Signature	Date

Master copy with original signatures held by Network Rail HQ
CIVIL ENGINEERING STANDARD DESIGN

© COPYRIGHT NETWORK RAIL 2009

STANDARD HALF THROUGH UNDERBRIDGES
BOX GIRDERS & TRANSVERSE RIBBED FLOORS

DOUBLE TRACK – 2 GIRDERS
ALTERNATIVE TRIMMER
NARROW FLOORS >30° – 50° SKEW
SHEET 2 OF 2

Scale	1:10, 1:2	
Drawing Number	NR/CIV/SD/1048	B

Full document details: NR NR-CIV-SD-1048 ISSUE B 2010
Documents Document Standard Hub
Licensed to Network Rail
Copyright Network Rail
Provided by IHS under licence with Network Rail
Reproduced by permission of Network Rail. Not to be reproduced without permission from IHS