Supplementary Information

The following information is associated with Network Rail Standard:
NR CIV/SD/106 Rev A

Additional Content Access

Click the link below to access CAD version of this drawing.

CAD Drawing

- CIV/SD/106

If you have any questions, or need assistance, please contact **IHS Support**

Information accessed via the links above is the property of the Copyright holder

IHS Additional Content Page

Documents
Document Sharing Hub

Copyright Network Rail
Provided by IHS under license with Network Rail
No reproduction or networking permitted without license from IHS
Full document details: NR NR-CIV-SD-106 ISSUE A 2006

Licensee=Weston Williamson/5989497001, User=sam, albett
Not for Resale, 03/28/2016 00:18:28 MDT

Full document details: NR NR-CIV-SD-106 ISSUE A 2006

DO NOT SCALE THIS DRAWING

DRAWING No. NR/CIV/SD/106

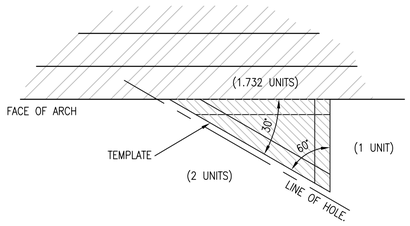

TYPICAL 30° TEMPLATE

SCALE 1 : 10

NOTE : TO ENSURE THE CORRECT DRILLING ANGLE IS MAINTAINED DURING INSTALLATION OF THE BARS A TEMPLATE SHOULD BE USED. THIS SHOULD BE CUT FROM SUITABLE PLYWOOD TO GIVE THE REQUIRED DRILLING ANGLE. THE ANGLE MAY VARY BETWEEN 30 – 45° DEPENDING ON THE NUMBER OF RINGS.

NO. OF RINGS	GRID PITCH
2	500
3	600
4	700
5	800
6	900

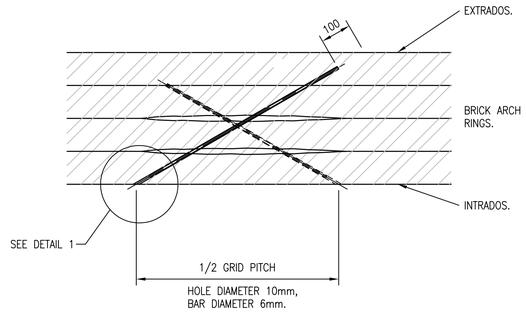

SECTION B – B ARCH RINGS PINNING ARRANGEMENT

SCALE 1 : 10

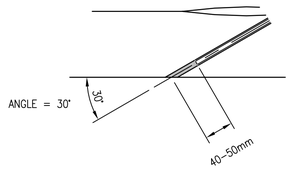

DETAIL 1

SCALE 1 : 5

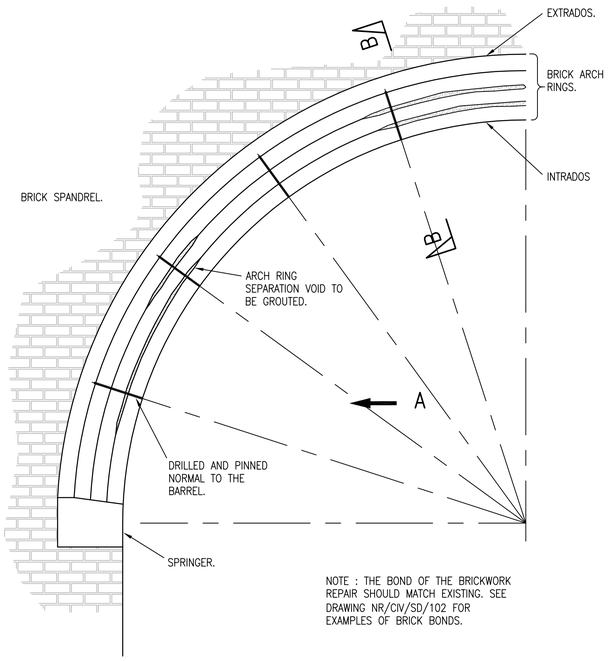

NOTE : THE BOND OF THE BRICKWORK REPAIR SHOULD MATCH EXISTING. SEE DRAWING NR/CIV/SD/102 FOR EXAMPLES OF BRICK BONDS.

PART ELEVATION ON ARCH

SCALE 1 : 20

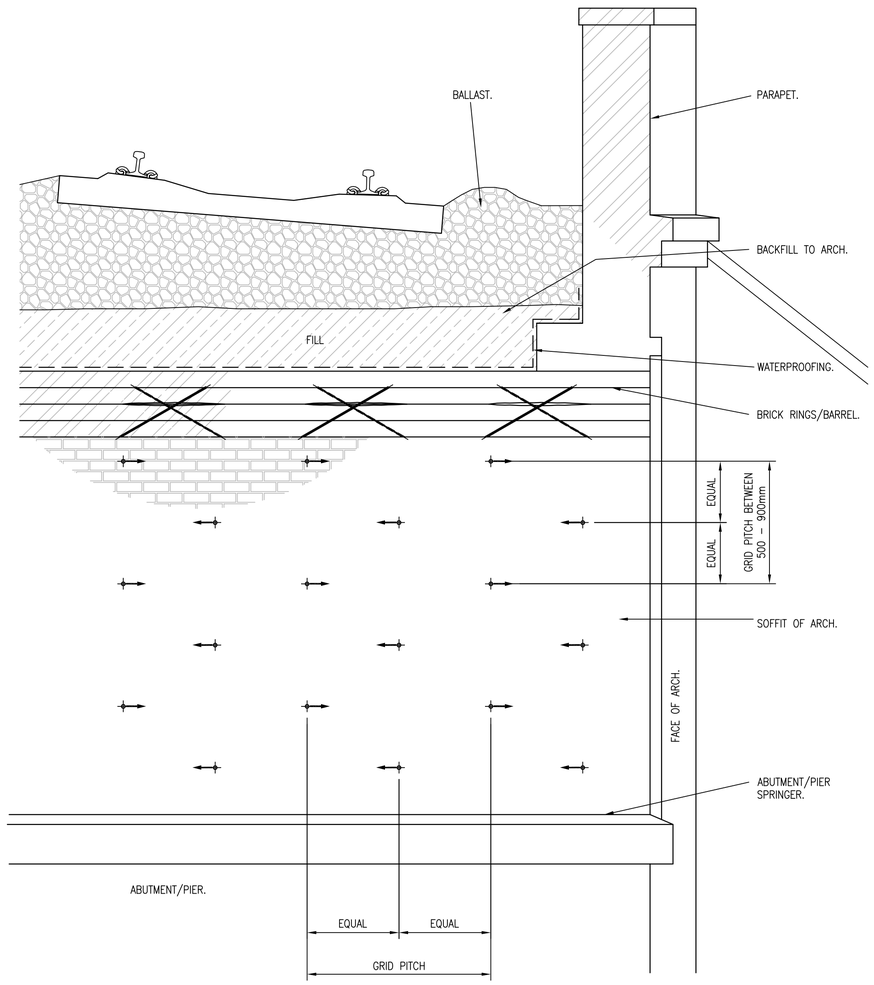

VIEW ON "A", ARCH INTRADOS FROM ABUTMENT OR PIER TO CROWN OR THROUGH TUNNEL LINING (STITCHING SYSTEM GENERALLY USED TO CORRECT RING SEPARATION)

SCALE 1 : 20

INSTALLATION GUIDANCE

a) ADJACENT AREAS OF LOOSE OR SPALLED BRICKWORK SHALL BE REPLACED PRIOR TO THE STITCHING/GROUTING OPERATION, WITH NEW BRICKS MATCHING THE EXISTING IN COLOUR, STRENGTH AND BOND, OR MAY REQUIRE STITCHING TO PREVENT WHOLESALE DE–BONDING AND FALL OF BRICKWORK. SEE DRAWINGS NR/CIV/SD/103, 104 & 105.

b) THE CONTRACTOR SHALL MARK OUT THE GRID FOR STITCHING BAR HOLES ON THE ARCH SOFFIT.

c) HOLES SHALL (WHEREVER REASONABLY PRACTICABLE), BE FORMED THROUGH BRICK AND MASONRY UNITS AND NOT THROUGH JOINTS. THE HOLE SHALL BE DRILLED USING A CONVENTIONAL DRILL TO ASSIST ANCHOR ADHESION.

d) GROUT SHALL BE INJECTED FROM THE LOWEST HOLE UNTIL IT ISSUES FROM THE NEXT HIGHER HOLE AND LOCKED OFF. PROCEED UPWARDS UNTIL COMPLETE. THE GROUT SHALL BE INJECTED AT A LOW AND VARIABLE PRESSURE THAT ENSURES THE GROUT FLOWS AND PERMEATES THE BRICKWORK BUT MINIMISES EXCESSIVE LEAKAGE. THIS SHALL BE CLOSELY MONITORED BY THE CONTRACTOR WHO MUST GIVE DUE CONSIDERATION TO THE CONDITION OF THE BRICKWORK AND MINIMISE THE RISK OF "BLOW–OUT".

e) WHILST GROUT IS STILL 'GREEN' RE–DRILL THE HOLES. NOW INJECT THE ANCHOR GROUT INTO THE HOLE, INSERT THE STITCHING BARS IN THE SAME HOLES. SECURE WITH A TEMPORARY TIMBER BUNG TO PREVENT GROUT LOSS. REMOVE BUNG AFTER SET PERIOD AND POINT UP WITH MORTAR.

f) BARS SHALL INTERSECT THE RING SEPARATION AND ACHIEVE A MINIMUM ANCHORAGE LENGTH OF 300mm, BUT MAINTAINING 100mm CLEARANCE TO THE ARCH EXTRADOS.

g) INTERSECTION HOLES SHALL BE DRILLED IN A PLANE PERPENDICULAR TO THE TANGENT OF THE INTRADOS AT AN ANGLE OF BETWEEN 30° & 45°. FOR CLARIFICATION SEE ACCOMPANYING SKETCH.

h) SPACING BETWEEN PINNING HOLES SHALL VARY BETWEEN 500 & 900mm DEPENDING ON THE THICKNESS OF BARREL AND SHALL FOLLOW THE GRID PATTERN AS SHOWN.

i) PINNING BAR HOLES SHALL BE SEALED WITH MORTAR TO MATCH THE EXISTING STRUCTURE.

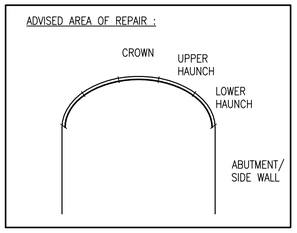

AREA APPROPRIATE FOR DETAILED REPAIR IS SHOWN BY HEAVY LINE.

NOTES

GENERAL

1. THIS DRAWING SHALL BE USED FOR CROSS STITCHING & GROUTING OF BRICK ARCH RINGS WHERE RING SEPARATION EXISTS.
2. WHERE BRICKWORK IN THE VICINITY OF THE CRACK REQUIRES REPLACING REFER TO DRAWINGS NR/CIV/SD/103, 104 & 105.
3. ALL TERMINOLOGY IS BASED ON THAT TYPICALLY USED TO DESCRIBE BRIDGE DEFECTS NOT TUNNEL DEFECTS.

SPECIFICATION

REFER TO REFERENCE DRAWINGS.

DESIGN ASSUMPTIONS

NONE.

RISK ASSESSMENT

REFER TO DRAWING NR/CIV/SD/101.

Rev	Date	Description of revision	Design'd	C'kd
A	22.06.06	FIRST ISSUE –NR APPROVED	RMA	NGAY
P3	17.03.06	REVISED FORM B.	RMA	NGAY
P2	31.01.06	FORM B ISSUE.	RMA	NGAY
P1	13.01.06	PRELIMINARY DRAFT	RMA	NGAY

Network Rail
40 Melton Street
London NW1 2EE
Tel: 020–7557–8000

	Name	Position	Signature	Date
Approved	P. CLARK	Programme Eng. Manager Civils, MP & I	PC	25.05.06
Authorised	K. TEAGER	Director of Civil Engineering	KT	08.06.06

Master copy with original signatures held by Network Rail HQ CIVIL ENGINEERING STANDARD DESIGN

© COPYRIGHT NETWORK RAIL 2006

BRICK AND MASONRY REPAIR STANDARD DRAWINGS

BRICK ARCH RING AND TUNNEL LINING CROSS PINNING AND GROUTING SYSTEM

Scale	AS SHOWN
Drawing Number	NR/CIV/SD/106
REV.	A

Documents
Document Sharing Hub
Copyright Network Rail
Provided by IHS under license with Network Rail
No reproduction or networking permitted without license from IHS
Licensee=Mott MacDonald Group Limited, User=sam, allan
2010-01-11 07:00:00 Z