Supplementary Information

The following information is associated with Network Rail Standard:
NR CIV/SD/1071 Rev B

Additional Content Access

Click the link below to access CAD version of this drawing.

CAD Drawing

- CIV/SD/1071

If you have any questions, or need assistance, please contact **IHS Support**

Information accessed via the links above is the property of the Copyright holder

IHS Additional Content Page

Documents
Document Sharing Hub

Copyright Network Rail
Provided by IHS under license with Network Rail
No reproduction or networking permitted without license from IHS
Full document details: NR NR-CIV-SD-1071 ISSUE B 2010

Licensee=Weston Williamson/5989497001, User=sam, albett
Not for Resale, 03/27/2016 21:06:26 MDT

Full document details: NR NR-CIV-SD-1071ISSUE B 2010

DRAWING No. NR/CIV/SD/1071

OUTER GIRDERS
21m, 24m & 27m SPANS

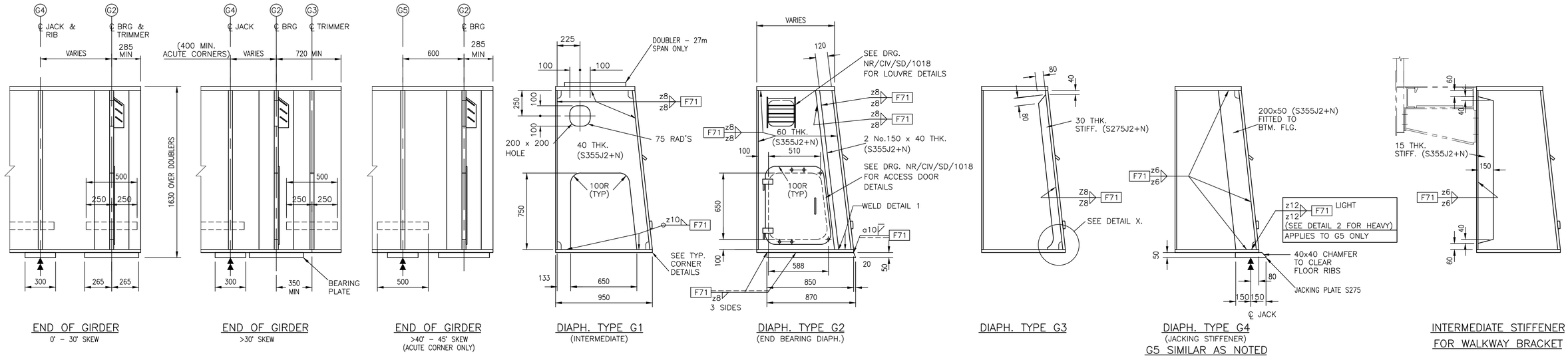

END OF GIRDER
0° – 30° SKEW

END OF GIRDER
>30° SKEW

END OF GIRDER
>40° – 45° SKEW
(ACUTE CORNER ONLY)

DIAPH. TYPE G1
(INTERMEDIATE)

DIAPH. TYPE G2
(END BEARING DIAPH.)

DIAPH. TYPE G3

DIAPH. TYPE G4
(JACKING STIFFENER)
G5 SIMILAR AS NOTED

INTERMEDIATE STIFFENER FOR WALKWAY BRACKET

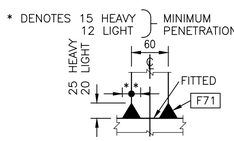

WELD DETAIL 1

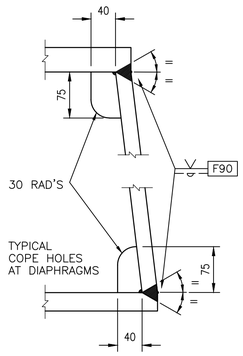

TYPICAL CORNER WELDS

NOTE: DETAILED DIMENSIONS OF WELD PREPS & WELDING PROCEDURES SHALL BE SUBJECT TO APPROVAL

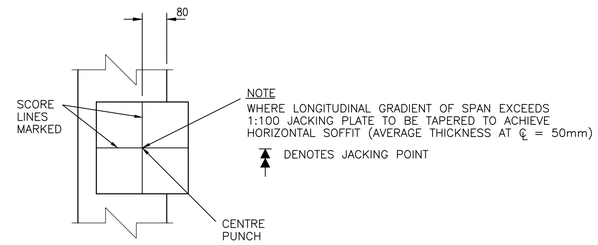

U/SIDE JACKING PLATES

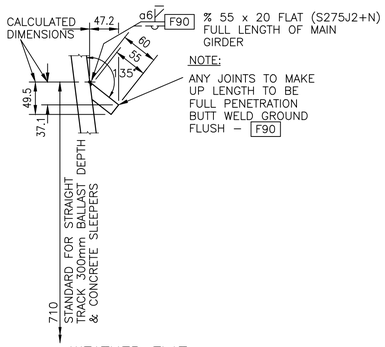

WEATHER FLAT

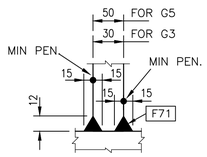

WELD DETAIL 2
(HEAVY GIRDERS)

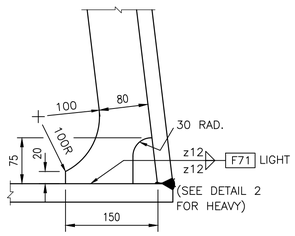

ENLARGED DETAIL X

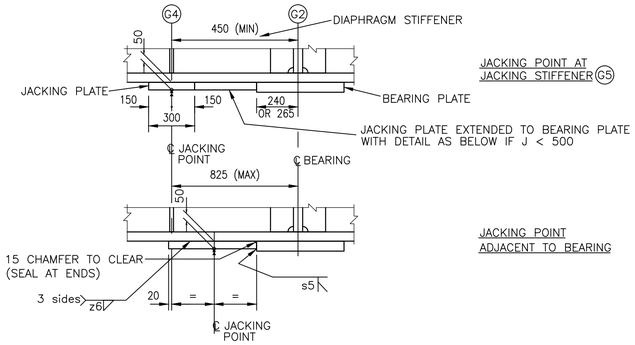

GIRDER JACKING POINT ALTERNATIVES

NOTE: JACKING POINT IS TO BE SELECTED DEPENDING UPON WHETHER JACKING IS TO BE CARRIED OUT ON ABUTMENT OR FROM TEMPORARY SUPPORT TRESTLE IN FRONT

1. JACKING STIFFENER TO BE AS CLOSE AS POSSIBLE TO BEARING BUT IS GENERALLY DETERMINED BY LOCATIONS OF FLOOR CONNECTIONS. SEE FLOOR DRAWINGS.

Rev	Date	Description of revision	Design'd	C'kd
B	Dec 10	EUROCODE ISSUE	CH	MM
A	Dec 09	ORIGINAL ISSUE	CH	MM

Network Rail
Network Rail Infrastructure Ltd
Registered Office:
Kings Place
90 York Way
London
N1 9AG

Approved	P Clark	Senior Programme Engineering Manager (Building & Civils)	P.C.	Dec–10
	Name	Position	Signature	Date

Master copy with original signatures held by Network Rail HQ
CIVIL ENGINEERING STANDARD DESIGN

© COPYRIGHT NETWORK RAIL 2009

STANDARD HALF THROUGH UNDERBRIDGES
BOX GIRDERS & TRANSVERSE RIBBED FLOORS

SINGLE TRACK – 2 GIRDERS
DOUBLE TRACK – 3 GIRDERS
MAIN GIRDER
DETAILS 1 – OUTER GIRDER

Scale	1:20, 1:10, 1:5	
Drawing Number	NR/CIV/SD/1071	B

Document Sharing Hub
Documents
Lorenzo Villarroel Williams\c0084/001, User=sam, allan
Copyright Network Rail
Provided by NRI under licence with Network Rail
Printed on 11-Jan-2011 Uncontrolled Copy Source from NRI