Supplementary Information

The following information is associated with Network Rail Standard:
NR CIV/SD/1072 Rev B

Additional Content Access

Click the link below to access CAD version of this drawing.

CAD Drawing

- CIV/SD/1072

If you have any questions, or need assistance, please contact **IHS Support**

Information accessed via the links above is the property of the Copyright holder

IHS Additional Content Page

Documents
Document Sharing Hub

Copyright Network Rail
Provided by IHS under license with Network Rail
No reproduction or networking permitted without license from IHS
Full document details: NR NR-CIV-SD-1072 ISSUE B 2010

Licensee=Weston Williamson/5989497001, User=sam, albett
Not for Resale, 03/27/2016 21:06:57 MDT

DRAWING No. NR/CIV/SD/1072

CENTRE GIRDER 21m, 24m & 27m SPANS

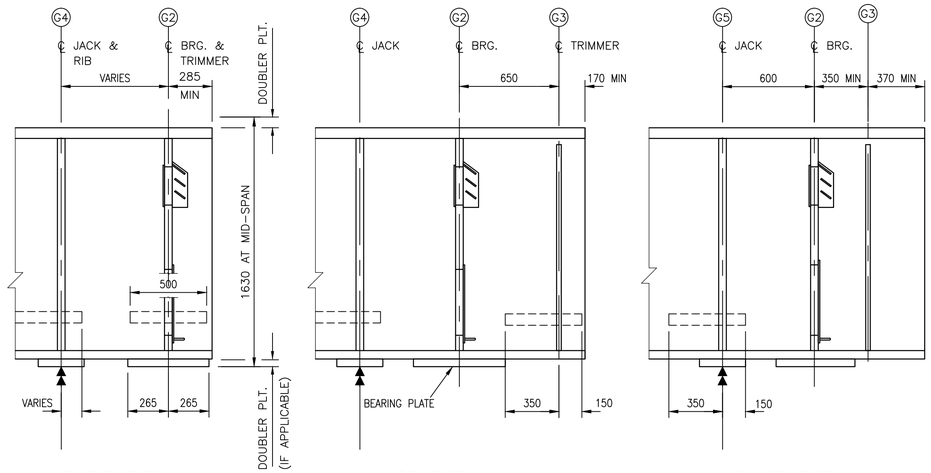

0°–30° SKEW

>30° SKEW

>40°–55° SKEW
(ACUTE CORNER ONLY)

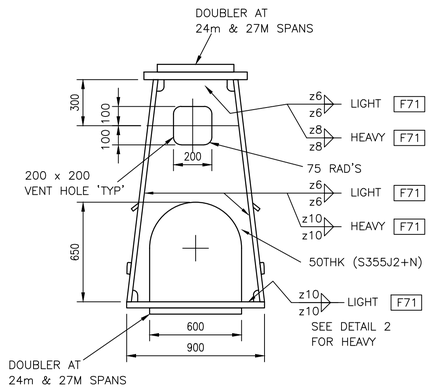

DIAPH. TYPE G1
(INTERMEDIATE DIAPH)

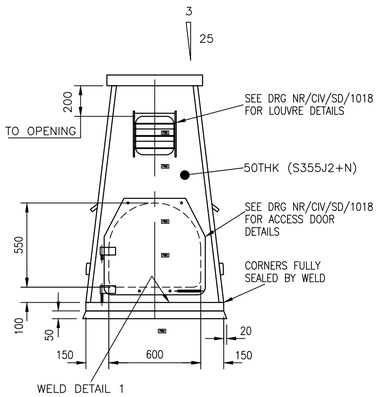

DIAPH. TYPE G2
(END BEARING DIAPHRAGM)

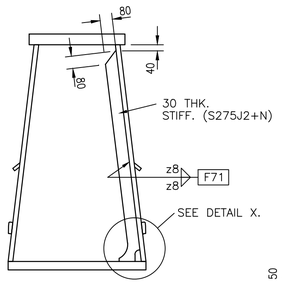

STIFF'R TYPE G3

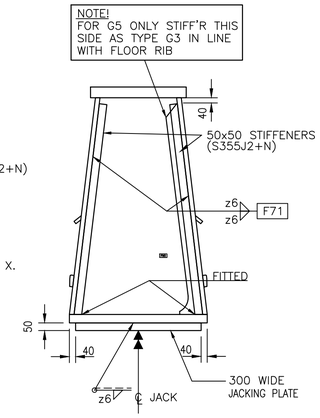

JACKING STIFF'RS TYPE G4
G5 SIMILAR AS NOTED

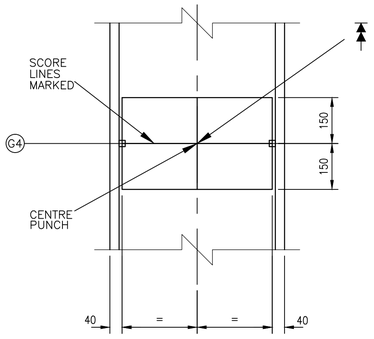

U/SIDE JACKING PLATE
(0° SKEW)

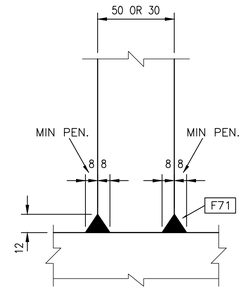

WELD DETAIL 2
(WELD TO BE ALL ROUND)

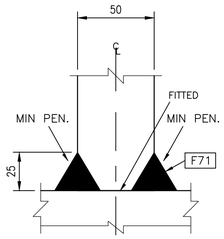

WELD DETAIL 1

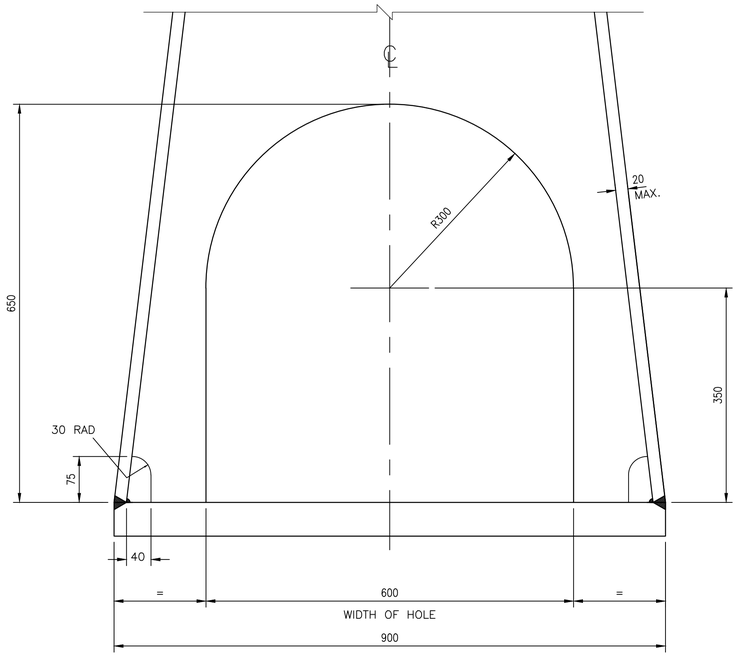

DETAILS OF ACCES HOLE
DIAPHRAGM TYPE G1

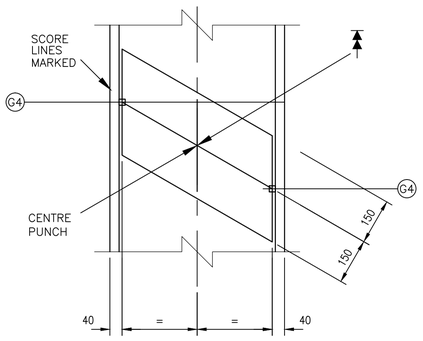

U/SIDE JACKING PLATE
(SKEWED)

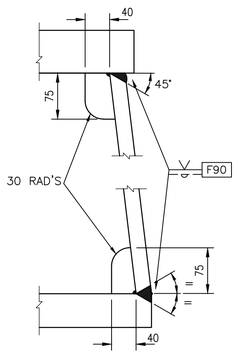

TYPICAL CORNER WELDS

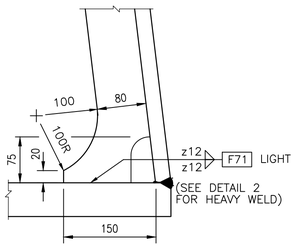

DETAIL X

NOTE
WHERE LONGITUDINAL GRADIENT OF SPAN EXCEEDS 1:100 JACKING PLATE TO BE TAPERED TO ACHIEVE HORIZONTAL SOFFIT (AVERAGE THICKNESS AT ℄ = 50mm)

DENOTES JACKING POINT

NOTE!
DETAILED DIMENSIONS OF WELD PREPS & WELDING PROCEDURES SHALL BE SUBJECT TO APPROVAL

1. JACKING STIFFENER TO BE AS CLOSE AS POSSIBLE TO BEARING BUT IS GENERALLY DETERMINED BY LOCATIONS OF FLOOR CONNECTIONS. SEE FLOOR DRAWINGS.
2. STIFFENERS G3 ARE REQUIRED FOR SKEWS > 30°. STIFFENER TO BE PROVIDED AT OBTUSE END OF SKEWED TRIMMER. ACCESS DOOR TO BE HANDED AS REQUIRED SO AS TO CLEAR STIFFENER WHEN OPENED.

Rev	Date	Description of revision	Design'd	C'kd
B	Dec 10	EUROCODE ISSUE	CH	MM
A	Dec 09	ORIGINAL ISSUE	CH	MM

Network Rail
Network Rail Infrastructure Ltd
Registered Office:
Kings Place
90 York Way
London
N1 9AG

Approved	P Clark	Senior Programme Engineering Manager (Building & Civils)	P.C.	Dec–10
	Name	Position	Signature	Date

Master copy with original signatures held by Network Rail HQ
CIVIL ENGINEERING STANDARD DESIGN
© COPYRIGHT NETWORK RAIL 2009

STANDARD HALF THROUGH UNDERBRIDGES
BOX GIRDERS & TRANSVERSE RIBBED FLOORS

SINGLE TRACK – 2 GIRDERS
DOUBLE TRACK – 3 GIRDERS
MAIN GIRDERS
DETAILS 2 – CENTRE GIRDERS

Scale	1:2, 1:5, 1:10, 1:20	
Drawing Number	NR/CIV/SD/1072	B

Full document details: NR NR-CIV-SD-1072 ISSUE B 2010
Documents Standard Hub
Licensee:Mapon Willoughby(0008106), User:sam. ellett
Uncontrolled Copy Printed 01/11/2010
Copyright Network Rail
Provided by IHS under licence with Network Rail
Reproduced by permission of the Controller of HMSO. Licence from IHS