The following information is associated with Network Rail Standard:
NR CIV/SD/1073 Rev B

Additional Content Access

Click the link below to access CAD version of this drawing.

CAD Drawing

- CIV/SD/1073

If you have any questions, or need assistance, please contact **IHS Support**

Information accessed via the links above is the property of the Copyright holder

IHS Additional Content Page

--`,,,,,,`,,,,,,`,,`,,,,,,,,`-`-`,,`,,`,`,,`---

Documents
Document Sharing Hub

Copyright Network Rail
Provided by IHS under license with Network Rail
No reproduction or networking permitted without license from IHS
Full document details: NR NR-CIV-SD-1073 ISSUE B 2010

Licensee=Weston Williamson/5989497001, User=sam, albett
Not for Resale, 03/27/2016 21:04:56 MDT

DRAWING No. NR/CIV/SD/1073

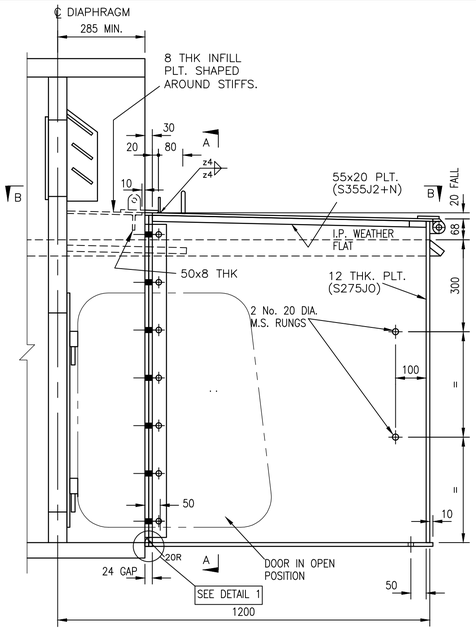

BOLT–ON INSPECTION UNIT
TOP ACCESS TYPE (1:10)

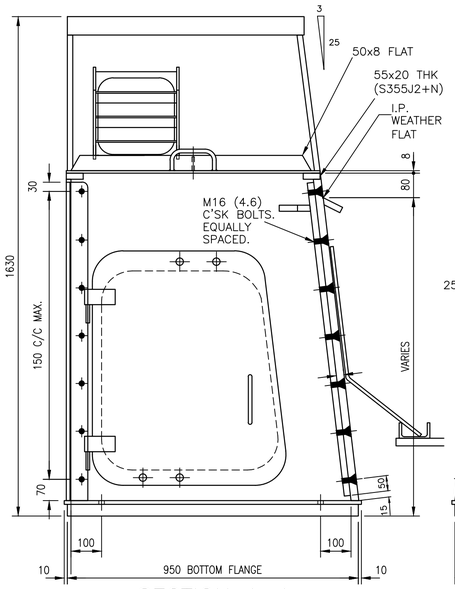

SECTION A–A
OUTER GIRDER

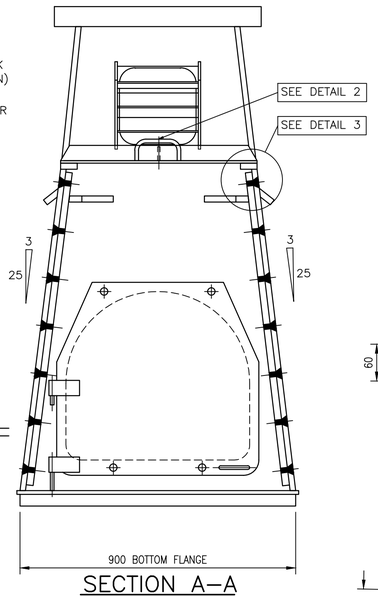

SECTION A–A
CENTRE GIRDER

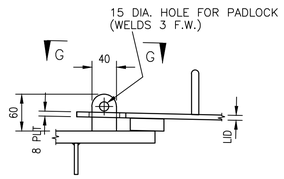

LID LOCKING DETAIL
AT INTEGRAL INSPECTION UNIT
1No. LOCATION PER LID
(SCALE 1:5)

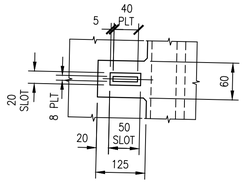

PLAN ON G–G
(SCALE 1:5)

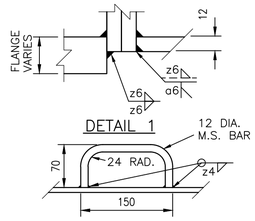

DETAIL 1

DETAIL 2

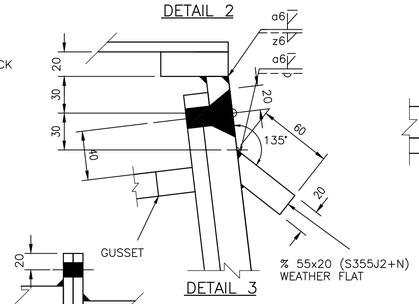

DETAIL 3

DETAIL 5

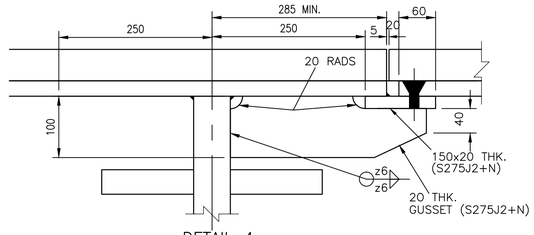

DETAIL 4
(AT DIAPHRAGMS G2 BEARING DIAPHRAGMS)

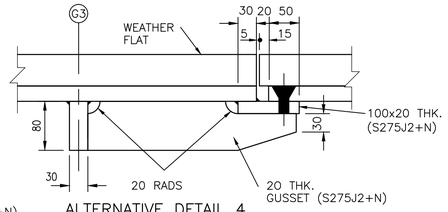

ALTERNATIVE DETAIL 4
(AT DIAPHRAGMS G3 FOR SKEWS>30°)

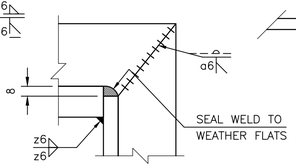

DETAIL 6

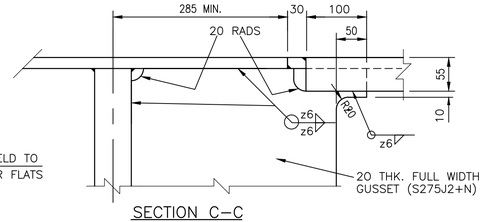

SECTION C–C
(FOR INTEGRAL UNIT)

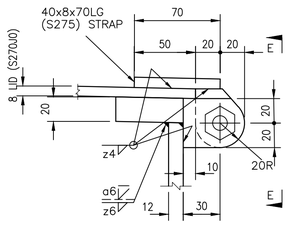

HINGE DETAIL

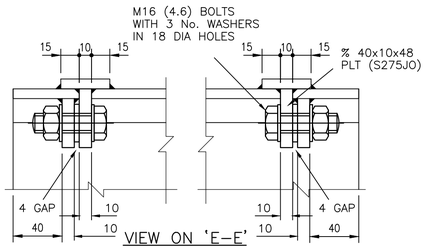

VIEW ON 'E–E'

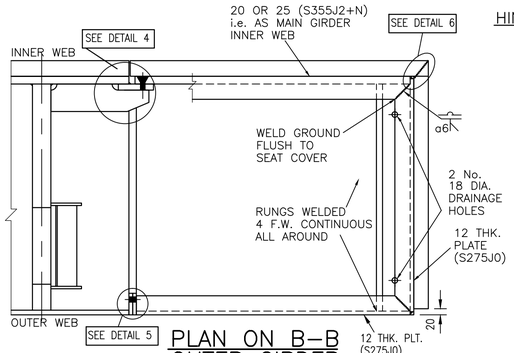

PLAN ON B–B
OUTER GIRDER
(COVER REMOVED)

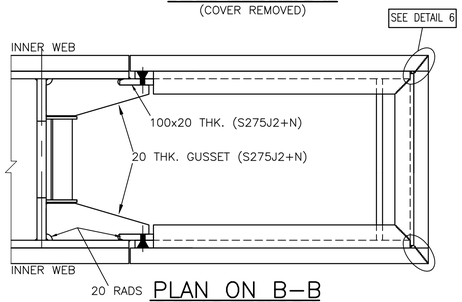

PLAN ON B–B
CENTRE GIRDER
DETAILS AS OUTER GIRDER

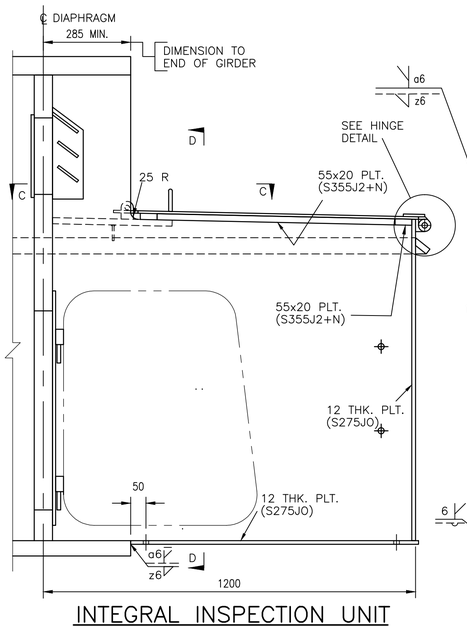

INTEGRAL INSPECTION UNIT
TOP ACCESS TYPE (1:10)

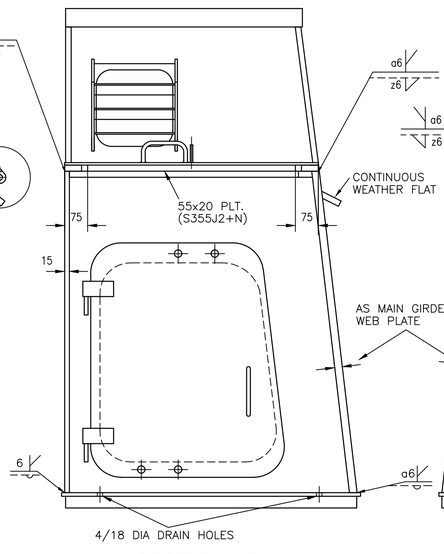

SECTION D–D
OUTER GIRDER

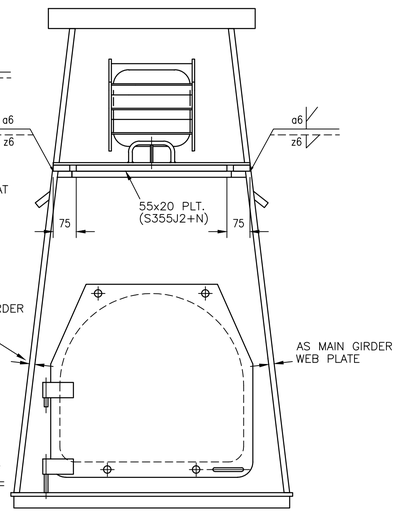

SECTION D–D
CENTRE GIRDER

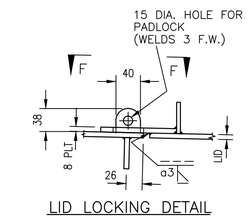

LID LOCKING DETAIL
AT BOLT ON INSPECTION UNIT
1No. LOCATION PER LID
(SCALE 1:5)

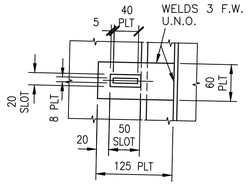

PLAN ON F–F
(SCALE 1:5)

Rev	Date	Description of revision	Design'd	C'kd
B	Dec 10	EUROCODE ISSUE	CH	MM
A	Dec 09	ORIGINAL ISSUE	CH	MM

Network Rail

Network Rail Infrastructure Ltd
Registered Office:
Kings Place
90 York Way
London
N1 9AG

Approved	P Clark	Senior Programme Engineering Manager (Building & Civils)	P.C.	Dec–10
	Name	Position	Signature	Date

Master copy with original signatures held by Network Rail HQ
CIVIL ENGINEERING STANDARD DESIGN

© COPYRIGHT NETWORK RAIL 2009

STANDARD HALF THROUGH UNDERBRIDGES
BOX GIRDERS & TRANSVERSE RIBBED FLOORS

SINGLE TRACK – 2 GIRDERS
DOUBLE TRACK – 3 GIRDERS

GIRDER INSPECTION UNITS

SHEET 1 OF 2

Scale	1:10, 1:5, 1:2.5
Drawing Number	NR/CIV/SD/1073 B

Full document details: NR NR-CIV-SD-1073 ISSUE B 2010
Documents Document Sharing Hub
Copyright Network Rail
Provided by IHS under licence with Network Rail
Licensee=Halcrow Yolande/5944100, User=sam, albert
No reproduction or networking permitted without licence from IHS