Supplementary Information

The following information is associated with Network Rail Standard:
NR CIV/SD/1080 Rev B

Additional Content Access

Click the link below to access CAD version of this drawing.

CAD Drawing

- CIV/SD/1080

If you have any questions, or need assistance, please contact **IHS Support**

Information accessed via the links above is the property of the Copyright holder

IHS Additional Content Page

Documents
Document Sharing Hub

Copyright Network Rail
Provided by IHS under license with Network Rail
No reproduction or networking permitted without license from IHS
Full document details: NR NR-CIV-SD-1080 ISSUE B 2010

Licensee=Weston Williamson/5989497001, User=sam, albett
Not for Resale, 03/27/2016 21:06:07 MDT

DRAWING No. NR/CIV/SD/1080

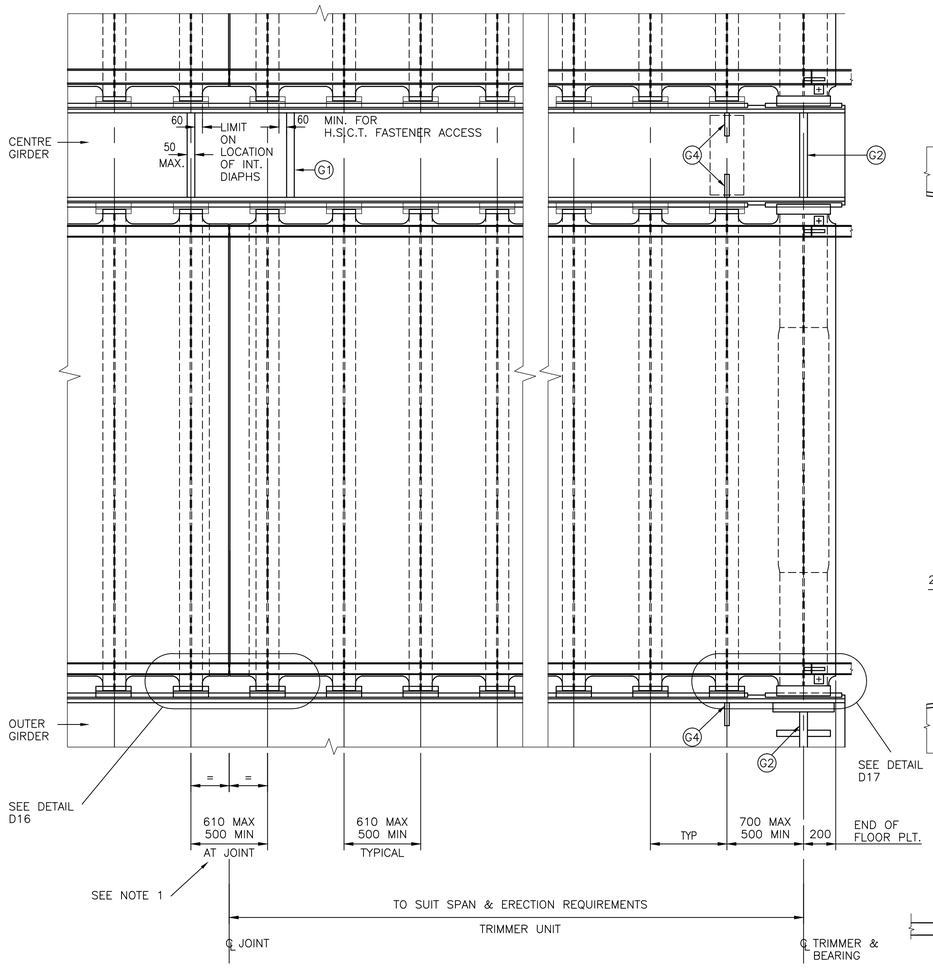

PLAN

TYPICAL INTERMEDIATE / TRIMMER UNIT

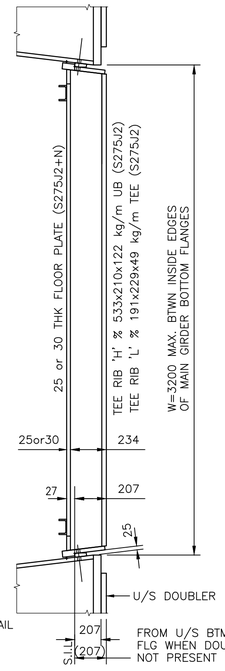

TYPICAL CROSS SECTION

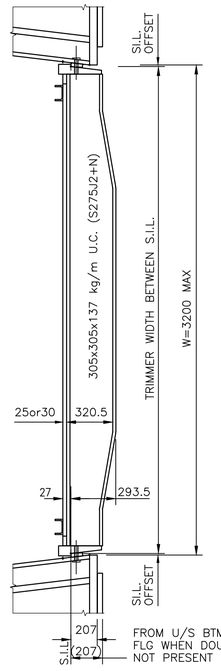

CROSS SECTION AT TRIMMER

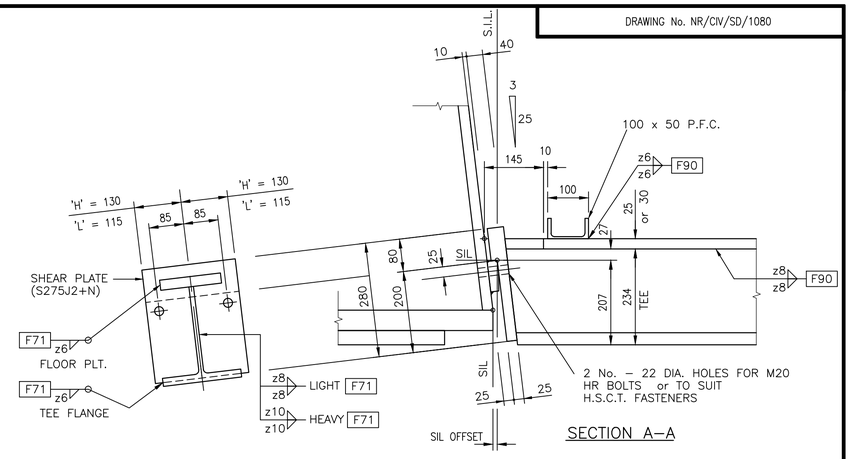

SECTION A–A

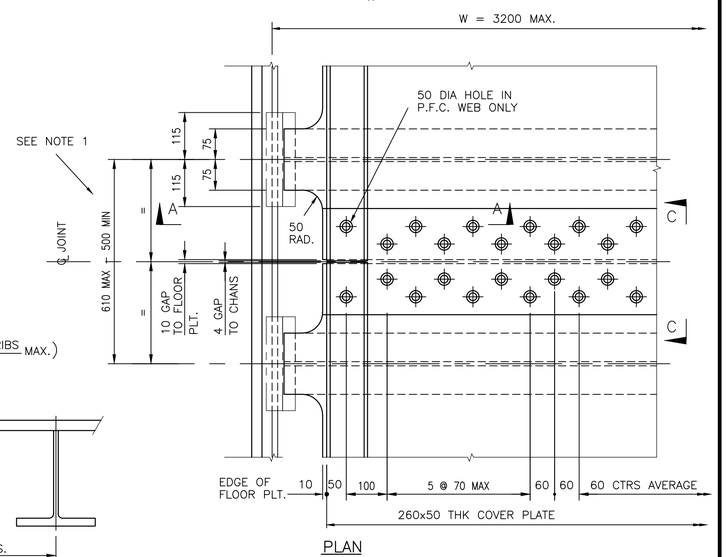

PLAN

DETAIL D16

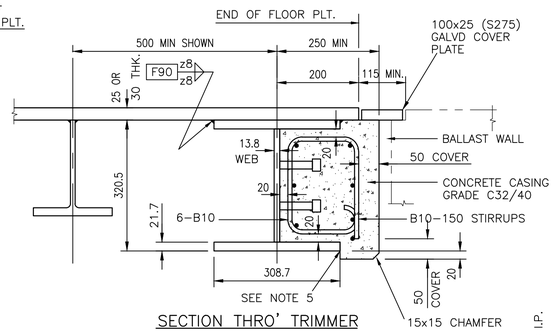

SECTION THRO' TRIMMER

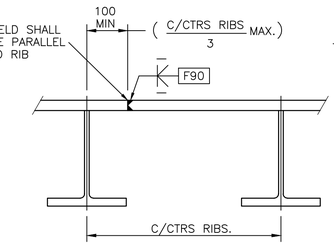

LOCATION OF FLOOR PLATE BUTT WELD

NOTE! THE NUMBER OF BUTT WELDS SHALL BE MINIMISED AS FAR AS POSSIBLE & LIMITED TO ONE PER UNIT. LOCATIONS SHALL BE SUBJECT TO WRITTEN APPROVAL OF THE ENGINEER.

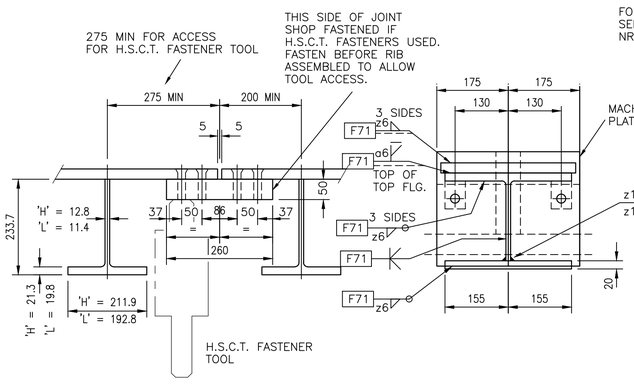

SECTION C–C

SECTION D–D

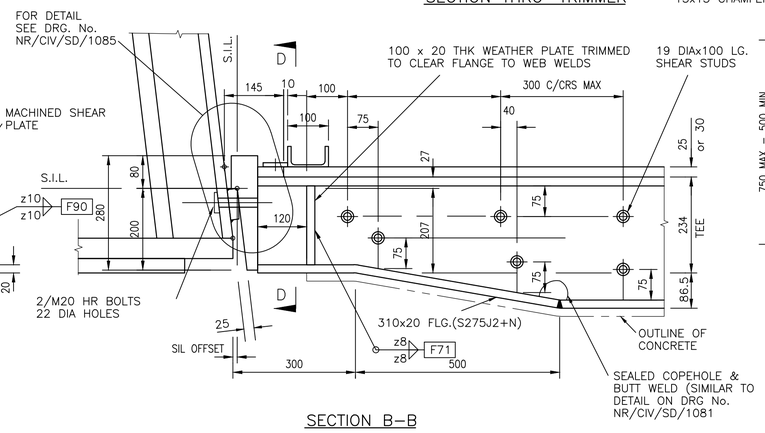

SECTION B–B

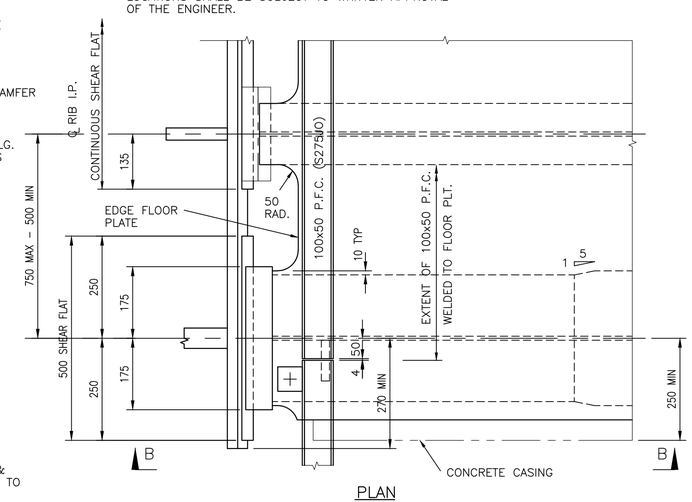

PLAN

DETAIL D17

1. 500 RIB SPACING IS DESIRABLE MINIMUM TO ALLOW WELDING, PROTECTIVE TREATMENT & MAINTENANCE.
2. TEE RIBS AND TRIMMERS SHALL BE FORMED IN ONE LENGTH. INTERMEDIATE WELDED JOINTS ARE NOT PERMITTED.
3. TRIMMER IS FABRICATED INTEGAL WITH FLOOR UNIT.
4. HIGH STRENGTH CLAMP TYPE (H.S.C.T.) FASTENERS TO HAVE STRENGTH AND PERFORMANCE EQUIVALENT TO SPECIFIED HR BOLTS AND ARE TO BE APPROVED BY THE ENGINEER. HOLE DIAMETERS TO BE MODIFIED TO SUIT H.S.C.T. FASTENERS AS REQUIRED.
5. FOR DETAIL AT CONCRETE TO STEEL INTERFACES SEE DRG NO. NR/CIV/SD/1140 & 1141.

Rev	Date	Description of revision	Design'd	C'kd
B	Dec 10	EUROCODE ISSUE	CH	MM
A	Dec 09	ORIGINAL ISSUE	CH	MM

Network Rail

Network Rail Infrastructure Ltd
Registered Office:
Kings Place
90 York Way
London
N1 9AG

	Name	Position	Signature	Date
Approved	P Clark	Senior Programme Engineering Manager (Building & Civils)	P.C.	Dec–10

Master copy with original signatures held by Network Rail HQ
CIVIL ENGINEERING STANDARD DESIGN

© COPYRIGHT NETWORK RAIL 2009

STANDARD HALF THROUGH UNDERBRIDGES
BOX GIRDERS & TRANSVERSE RIBBED FLOORS

SINGLE TRACK – 2 GIRDERS
DOUBLE TRACK – 3 GIRDERS

FLOOR = 0° SKEW

Scale	1:7.5, 1:20
Drawing Number	NR/CIV/SD/1080 B

Full document details: NR NR-CIV-SD-1080 ISSUE B 2010
Documents Document Standard Hub
Copyright Network Rail
Provided by IHS under licence with Network Rail
Licensee=Halcrow Williams/5935672001, User=sam, allnet
Not for resale, Date/time of download is 2010-04-26 0700