Supplementary Information

The following information is associated with Network Rail Standard:
NR CIV/SD/1081 Rev B

Additional Content Access

Click the link below to access CAD version of this drawing.

CAD Drawing

- CIV/SD/1081

If you have any questions, or need assistance, please contact **IHS Support**

Information accessed via the links above is the property of the Copyright holder

IHS Additional Content Page

Documents
Document Sharing Hub

Copyright Network Rail
Provided by IHS under license with Network Rail
No reproduction or networking permitted without license from IHS
Full document details: NR NR-CIV-SD-1081 ISSUE B 2010

Licensee=Weston Williamson/5989497001, User=sam, albett
Not for Resale, 03/27/2016 21:05:06 MDT

DRAWING No. NR/CIV/SD/1081

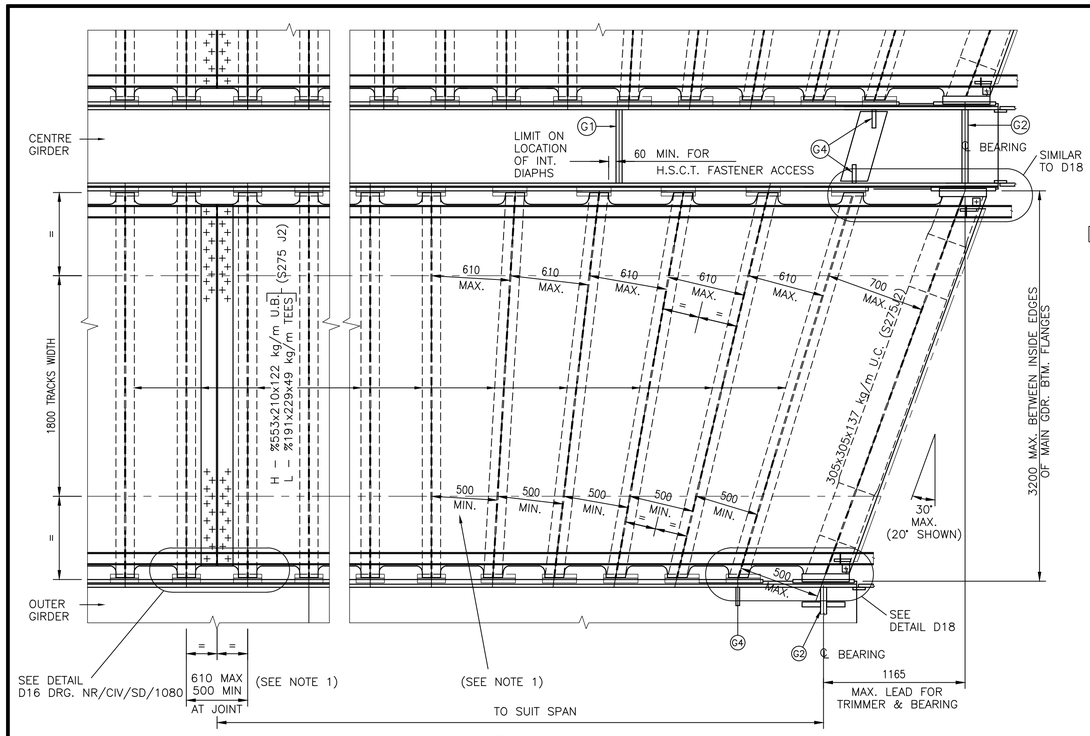

PLAN

TYPICAL INTERMEDIATE/TRIMMER UNIT 30° MAX END SKEW/FANNED RIBS

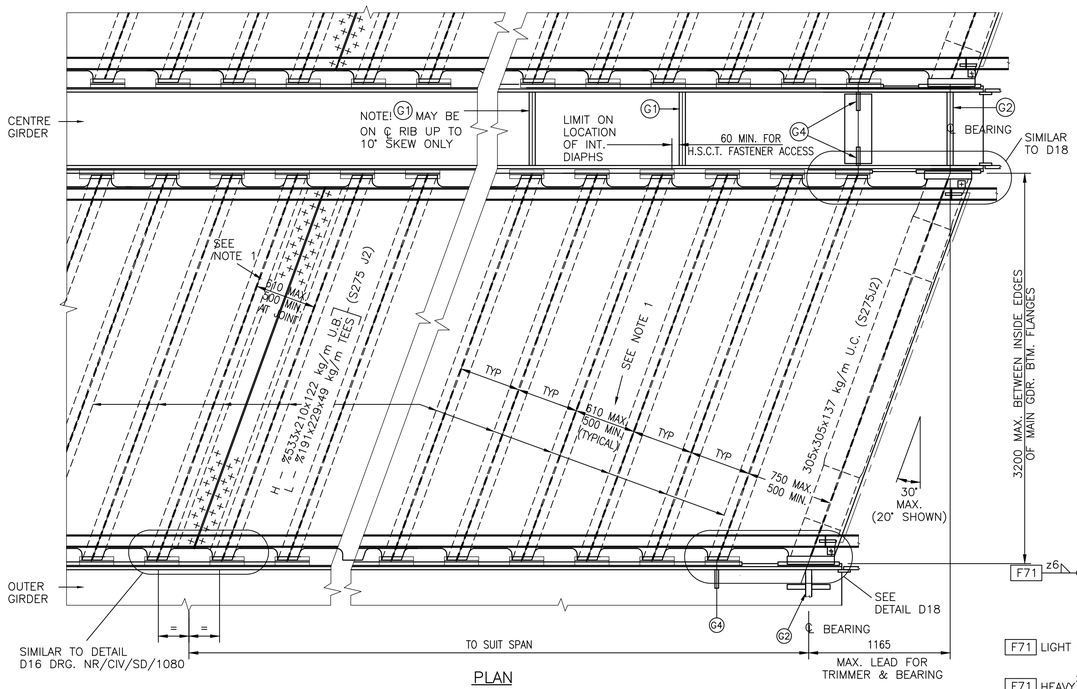

PLAN

TYPICAL INTERMEDIATE/TRIMMER UNIT 30° MAX END SKEW/SKEWED RIBS

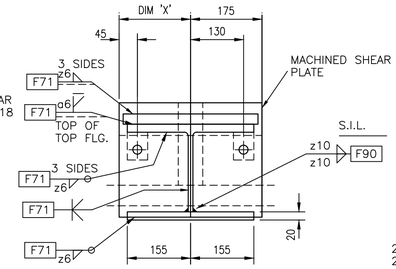

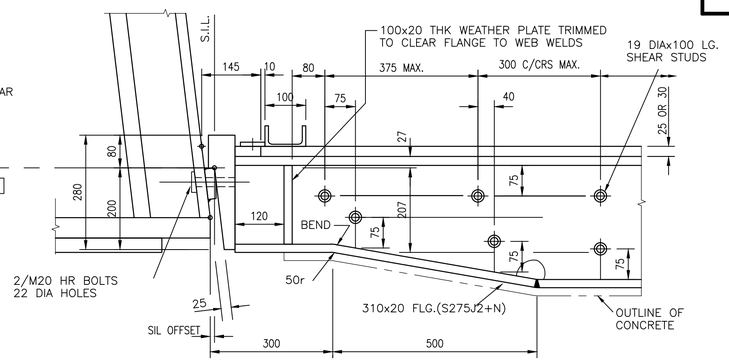

VIEW ON A–A

SKEW	DIM Y
> 0°–10°	85
>10°–20°	110
>20°–30°	155

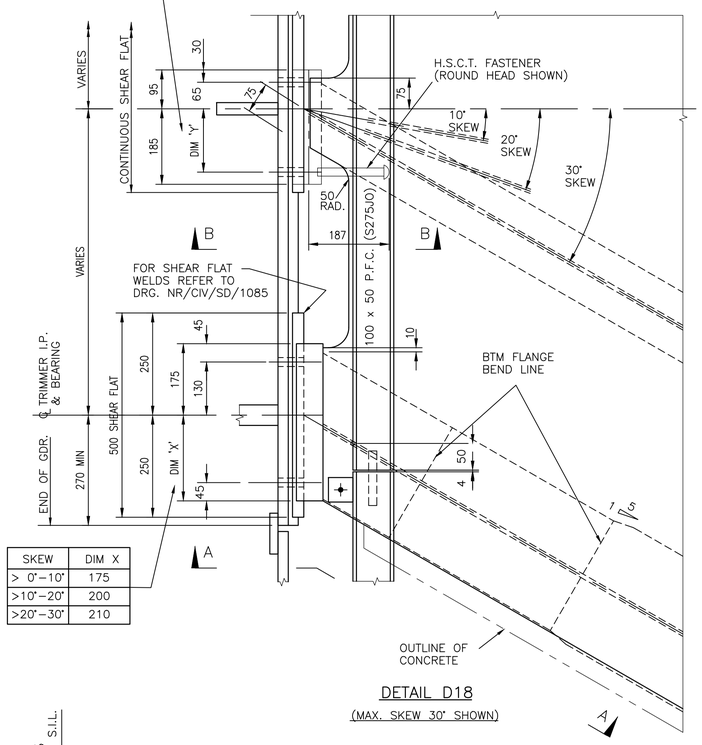

DETAIL D18

(MAX. SKEW 30° SHOWN)

NOTE
FOR TYPICAL CROSS SECTIONS THRO' FLOOR UNIT AT TRIMMER AND THRO' TRIMMER SEE DRG. NR/CIV/SD/1080

SKEW	DIM X
> 0°–10°	175
>10°–20°	200
>20°–30°	210

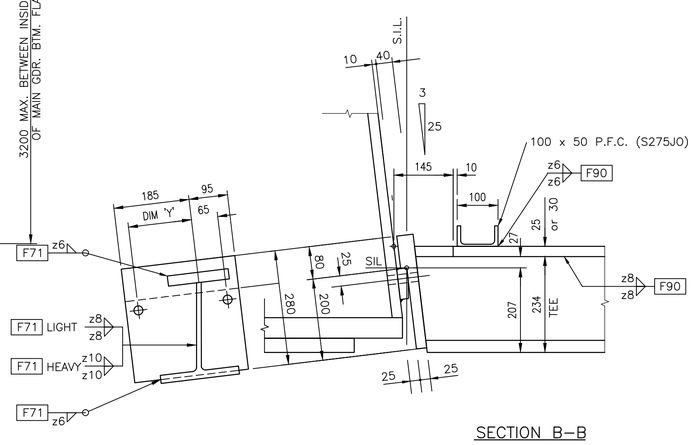

SECTION B–B

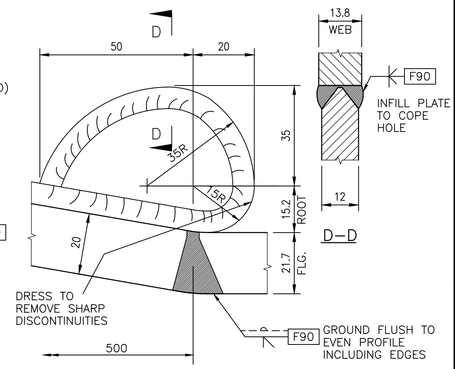

COPEHOLE & BUTT WELD DETAIL

Rev	Date	Description of revision	Design'd	C'kd
B	Dec 10	EUROCODE ISSUE	CH	MM
A	Dec 09	ORIGINAL ISSUE	CH	MM

Network Rail Infrastructure Ltd
Registered Office:
Kings Place
90 York Way
London
N1 9AG

Approved	P Clark	Senior Programme Engineering Manager (Building & Civils)	P.C.	Dec–10
	Name	Position	Signature	Date

Master copy with original signatures held by Network Rail HQ CIVIL ENGINEERING STANDARD DESIGN

© COPYRIGHT NETWORK RAIL 2009

STANDARD HALF THROUGH UNDERBRIDGES BOX GIRDERS & TRANSVERSE RIBBED FLOORS

SINGLE TRACK – 2 GIRDERS
DOUBLE TRACK – 3 GIRDERS

>0° – 30° SKEW

Scale	1:7.5, 1:25	
Drawing Number	NR/CIV/SD/1081	B

1. 500 RIB SPACING IS DESIRABLE MINIMUM TO ALLOW WELDING, PROTECTIVE TREATMENT & MAINTENANCE, MAY BE REDUCED TO 400 ABSOLUTE MINIMUM WHEN RIBS ARE FANNED.
2. TRIMMER IS FABRICATED INTEGAL WITH FLOOR UNIT.
3. TEE RIBS AND TRIMMERS SHALL BE FORMED IN ONE LENGTH. INTERMEDIATE WELDED JOINTS ARE NOT PERMITTED.
4. SEE DRG. NR/CIV/SD/1080 FOR LOCATIONS OF FLOOR PLATE BUTT WELDS.
5. HIGH STRENGTH CLAMP TYPE (H.S.C.T.) FASTENERS TO HAVE STRENGTH AND PERFORMANCE EQUIVALENT TO SPECIFIED HR BOLTS AND ARE TO BE APPROVED BY THE ENGINEER. HOLE DIAMETERS TO BE MODIFIED TO SUIT H.S.C.T. FASTENERS AS REQUIRED.

Full document details: NR NR-CIV-SD-1081 ISSUE B 2010
Documents Document Sharing Hub
Licensee=Atkins Wilbourn/5966100, User=sam, sheet
Copyright Network Rail
Provided by IHS under licence with Network Rail
Reproduced by IHS on Wednesday, 01-Jan-2014 00:00:00 Bureau from IHS