Supplementary Information

The following information is associated with Network Rail Standard:
NR CIV/SD/1083 Rev B

Additional Content Access

Click the link below to access CAD version of this drawing.

CAD Drawing

- CIV/SD/1083

If you have any questions, or need assistance, please contact **IHS Support**

Information accessed via the links above is the property of the Copyright holder

IHS Additional Content Page

Documents
Document Sharing Hub

Copyright Network Rail
Provided by IHS under license with Network Rail
No reproduction or networking permitted without license from IHS
Full document details: NR NR-CIV-SD-1083 ISSUE B 2010

Licensee=Weston Williamson/5989497001, User=sam, albett
Not for Resale, 03/27/2016 21:06:05 MDT

Full document details: NR NR-CIV-SD-1083 ISSUE B 2010

DRAWING No. NR/CIV/SD/1083

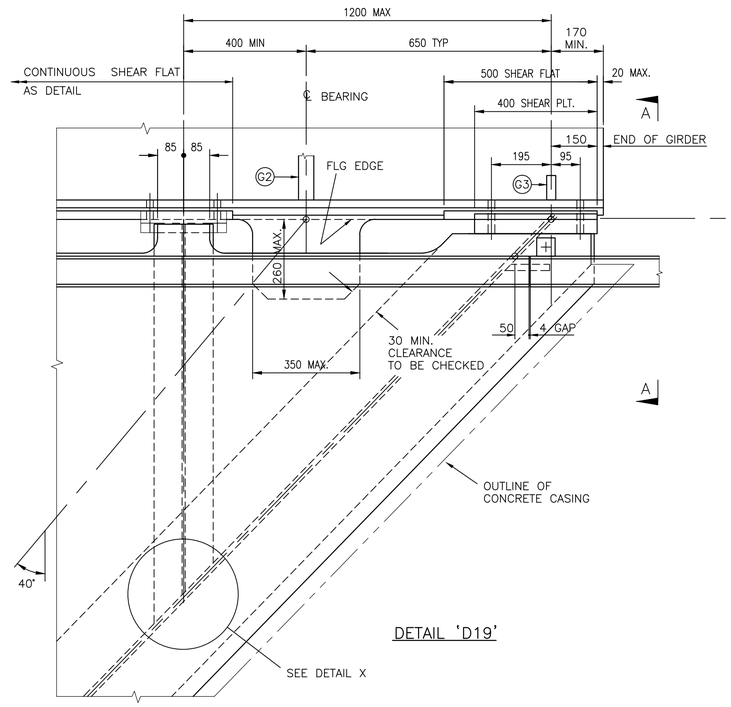

DETAIL 'D19'

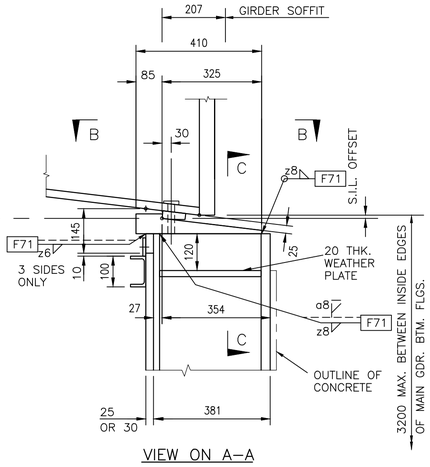

VIEW ON A–A

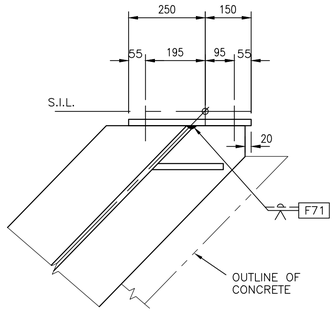

PLAN ON C–C BTM. FLG.

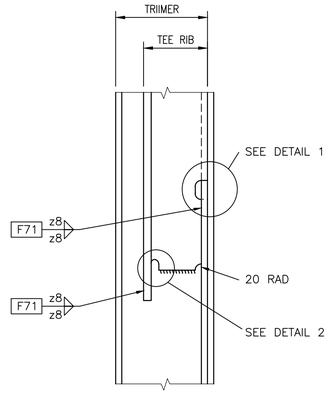

VIEW ON D–D

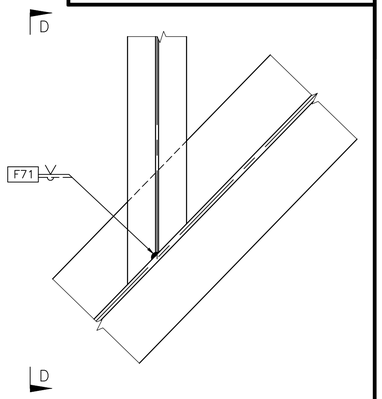

DETAIL X

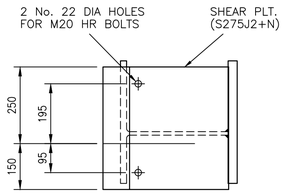

VIEW ON B–B

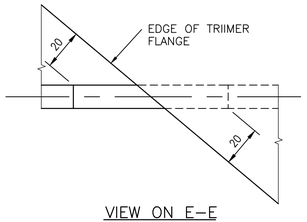

VIEW ON E–E

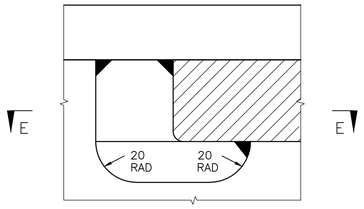

DETAIL 1

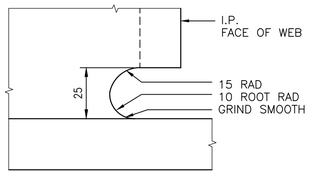

DETAIL 2

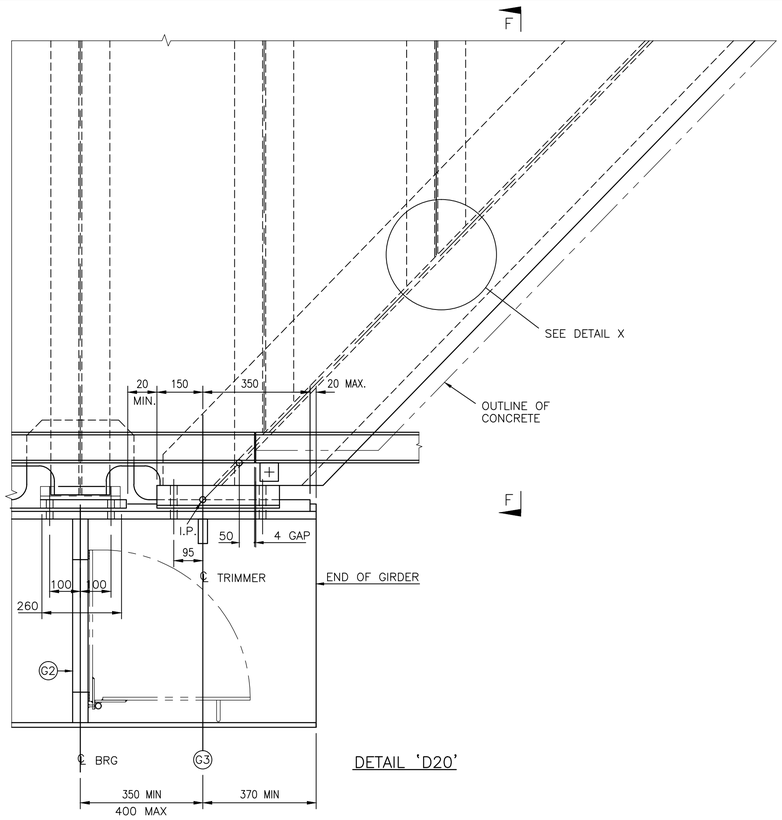

DETAIL 'D20'

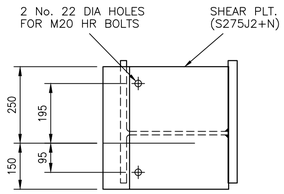

VIEW ON G–G

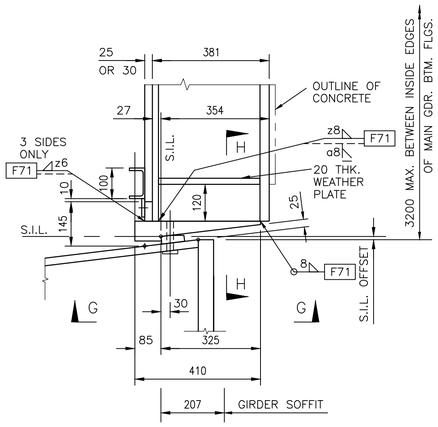

VIEW ON F–F

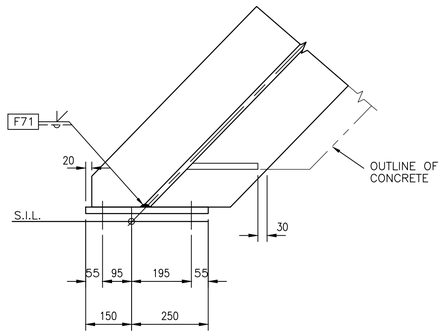

PLAN ON H–H BTM. FLG.

Rev	Date	Description of revision	Design'd	C'kd
B	Dec 10	EUROCODE ISSUE	CH	MM
A	Dec 09	ORIGINAL ISSUE	CH	MM

Network Rail

Network Rail Infrastructure Ltd
Registered Office:
Kings Place
90 York Way
London
N1 9AG

	Name	Position	Signature	Date
Approved	P Clark	Senior Programme Engineering Manager (Building & Civils)	P.C.	Dec–10

Master copy with original signatures held by Network Rail HQ CIVIL ENGINEERING STANDARD DESIGN

© COPYRIGHT NETWORK RAIL 2009

STANDARD HALF THROUGH UNDERBRIDGES BOX GIRDERS & TRANSVERSE RIBBED FLOORS

SINGLE TRACK – 2 GIRDERS
DOUBLE TRACK – 3 GIRDERS
>30° – 55° SKEW
DETAILS

SHEET 1 OF 2

Scale	1:10
Drawing Number	NR/CIV/SD/1083 B

Licence-Hasan Williams-c/0589/1/001. User-sam. allen
Date/Time 2010-11-17 09:57:00
Copyright Network Rail
Provided by IHS under licence with Network Rail
No reproduction or networking permitted without licence from IHS

Documents
Document Sharing Hub