Supplementary Information

The following information is associated with Network Rail Standard:
NR CIV/SD/1090 Rev B

Additional Content Access

Click the link below to access CAD version of this drawing.

CAD Drawing

- CIV/SD/1090

If you have any questions, or need assistance, please contact **IHS Support**

Information accessed via the links above is the property of the Copyright holder

IHS Additional Content Page

Documents
Document Sharing Hub

Copyright Network Rail
Provided by IHS under license with Network Rail
No reproduction or networking permitted without license from IHS
Full document details: NR NR-CIV-SD-1090 ISSUE B 2010

Licensee=Weston Williamson/5989497001, User=sam, albett
Not for Resale, 03/27/2016 21:06:49 MDT

DRAWING No. NR/CIV/SD/1090

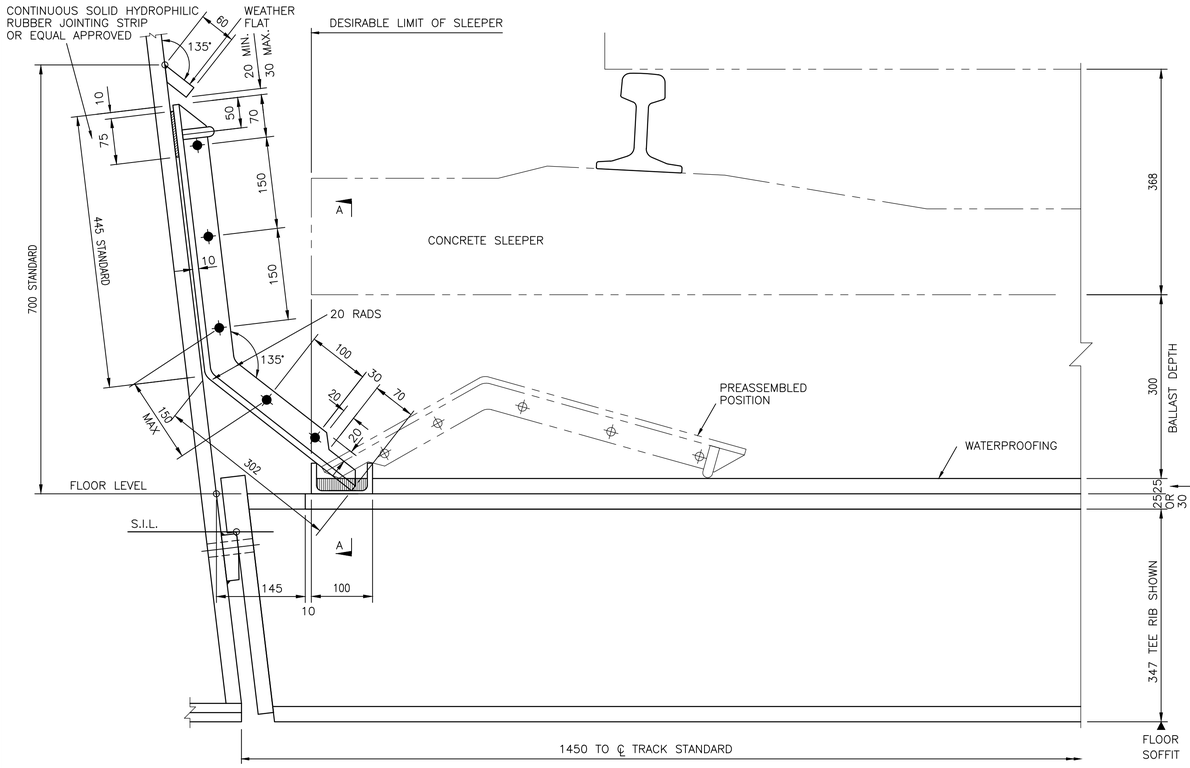

300 BALLAST DEPTH, CONCRETE SLEEPERS, STRAIGHT TRACK STANDARD HEIGHT

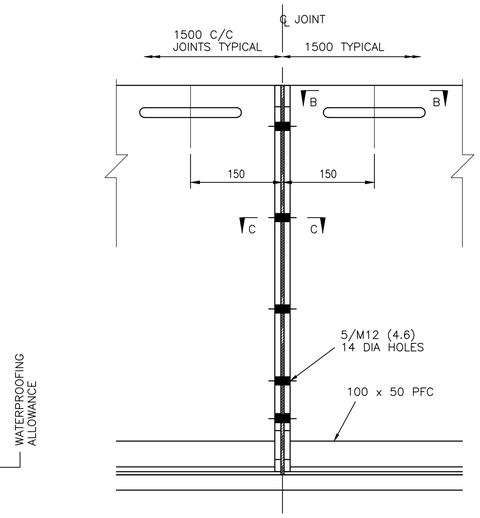

SECTION A–A

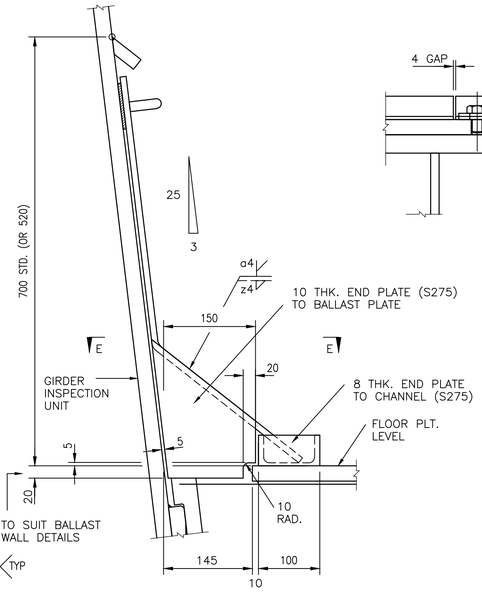

END DETAILS

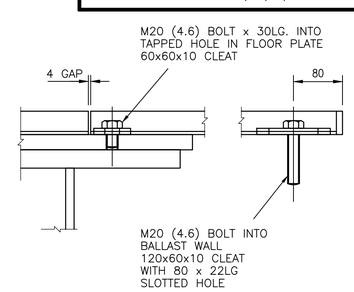

SECTION F–F

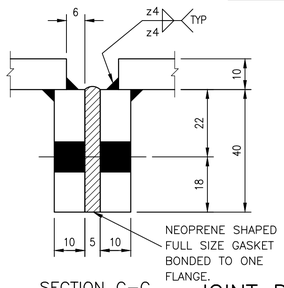

SECTION C–C

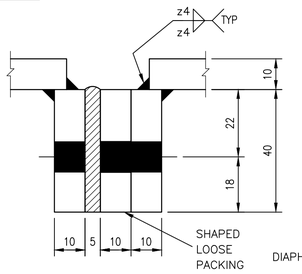

TOLERANCE JOINT

JOINT DETAILS

SCALE 1:1

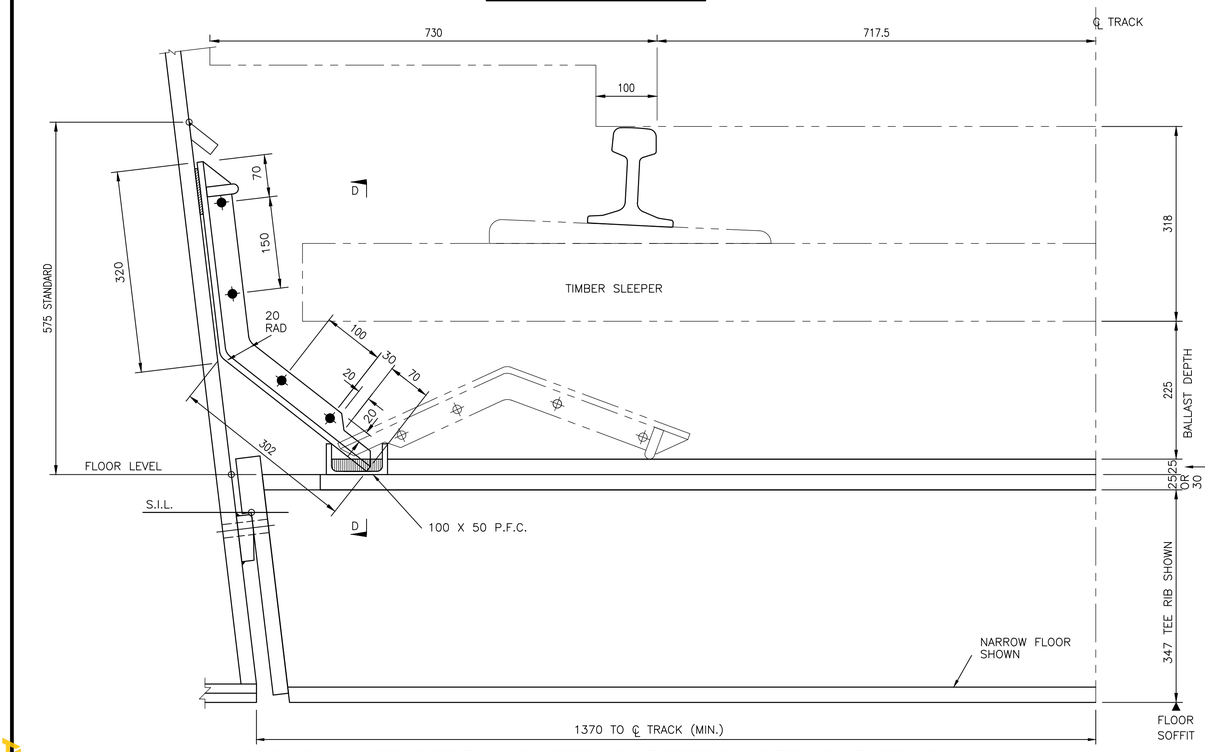

225 BALLAST DEPTH, TIMBER SLEEPERS, STRAIGHT TRACK

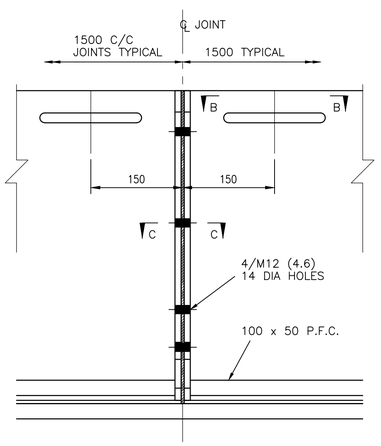

SECTION D–D

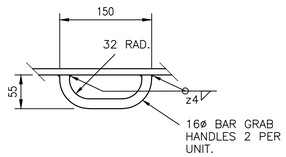

SECTION B–B

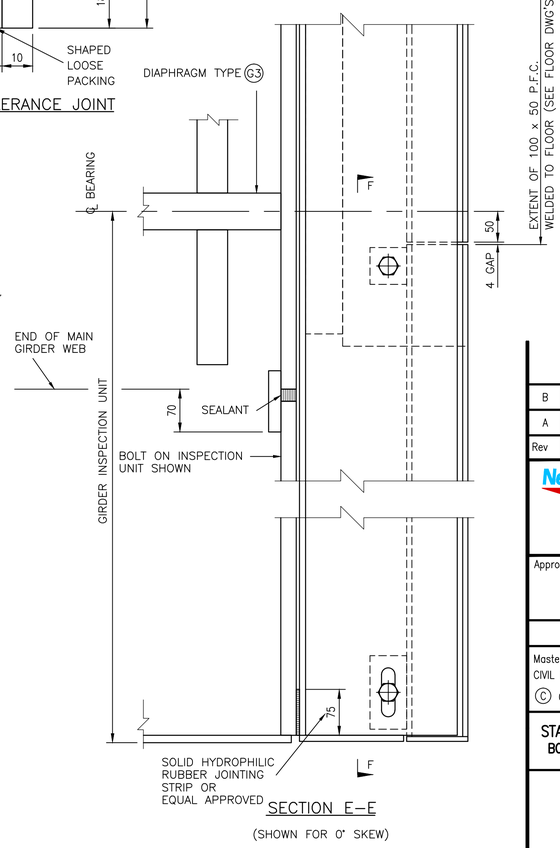

SECTION E–E

(SHOWN FOR 0° SKEW)

1. ALL STEEL GRADE S275.
2. TOLERANCE JOINTS TO BE PROVIDED WHERE TOTAL NUMBER OF BALLAST PLATES IN LENGTH EXCEEDS 6. OVERALL DIMENSIONS TO ALLOW FOR TOLERANCE JOINT EVERY 6TH JOINT.
3. WHERE DEEPER BALLAST PLATES ARE REQUIRED (eg CURVED TRACK) THEN SIMILAR DETAILS APPLY BUT NUMBER OF BOLTS AT JOINTS IS INCREASED.

Rev	Date	Description of revision	Design'd	C'kd
B	Dec 10	EUROCODE ISSUE	CH	MM
A	Dec 09	ORIGINAL ISSUE	CH	MM

Network Rail Infrastructure Ltd
Registered Office:
Kings Place
90 York Way
London
N1 9AG

	Name	Position	Signature	Date
Approved	P Clark	Senior Programme Engineering Manager (Building & Civils)	P.C.	Dec–10

Master copy with original signatures held by Network Rail HQ CIVIL ENGINEERING STANDARD DESIGN

© COPYRIGHT NETWORK RAIL 2009

STANDARD HALF THROUGH UNDERBRIDGES BOX GIRDERS & TRANSVERSE RIBBED FLOORS

BALLAST PLATES

Scale	1:5, 1:1
Drawing Number	NR/CIV/SD/1090 B

Full document details: NR NR-CIV-SD-1090 ISSUE B 2010
Documents Document Sharing Hub
Licensed Region Wilkinson 08/08/2012. User:sam. sfirst
Copyright Network Rail
Provided by IHS under licence with Network Rail
Reproduced by permission of Controller of HMSO and licence from IHS