Supplementary Information

The following information is associated with Network Rail Standard:
NR CIV/SD/1101 Rev B

Additional Content Access

Click the link below to access CAD version of this drawing.

CAD Drawing

- CIV/SD/1101

If you have any questions, or need assistance, please contact **IHS Support**

Information accessed via the links above is the property of the Copyright holder

IHS Additional Content Page

Documents
Document Sharing Hub

Copyright Network Rail
Provided by IHS under license with Network Rail
No reproduction or networking permitted without license from IHS
Full document details: NR NR-CIV-SD-1101 ISSUE B 2010

Licensee=Weston Williamson/5989497001, User=sam, albett
Not for Resale, 03/27/2016 21:05:29 MDT

DRAWING No. NR/CIV/SD/1101

TABLE OF DIMENSIONS				
DIM.	30m SPAN	33m SPAN	36m SPAN	39m SPAN
'A'	50	60	55	65
'B'	0	45	40	50

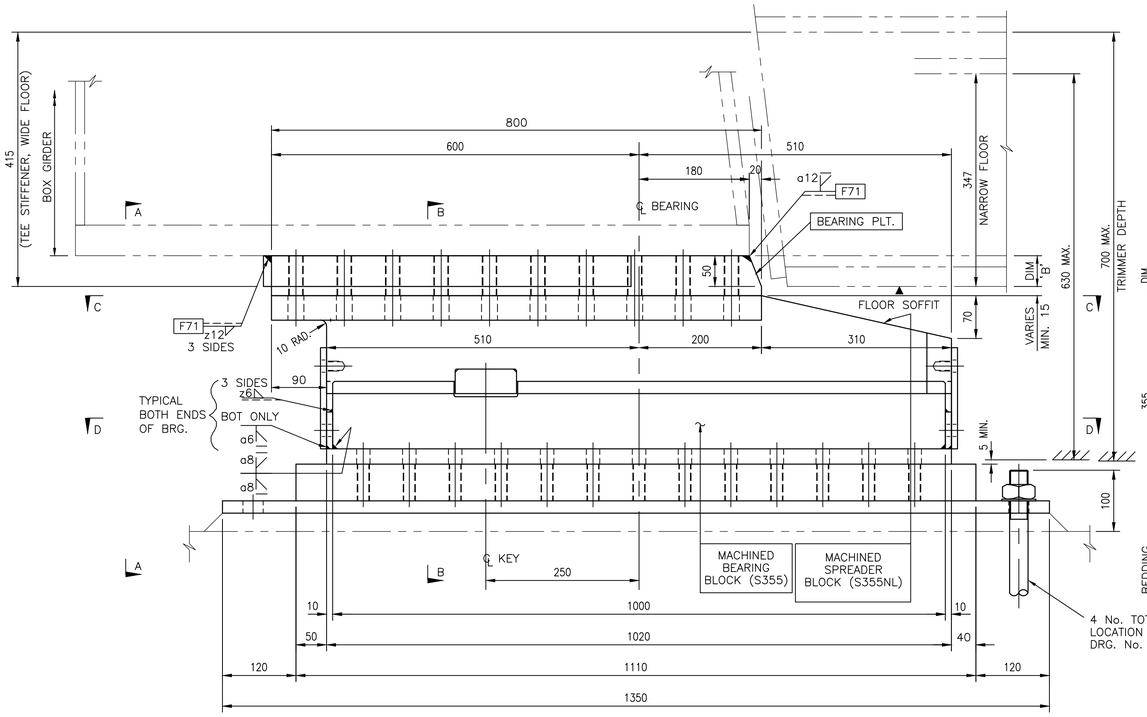

TRANSVERSE ELEVATION ON
'FIXED END' BEARING
FOR 30m, 33m, 36m & 39m SPANS

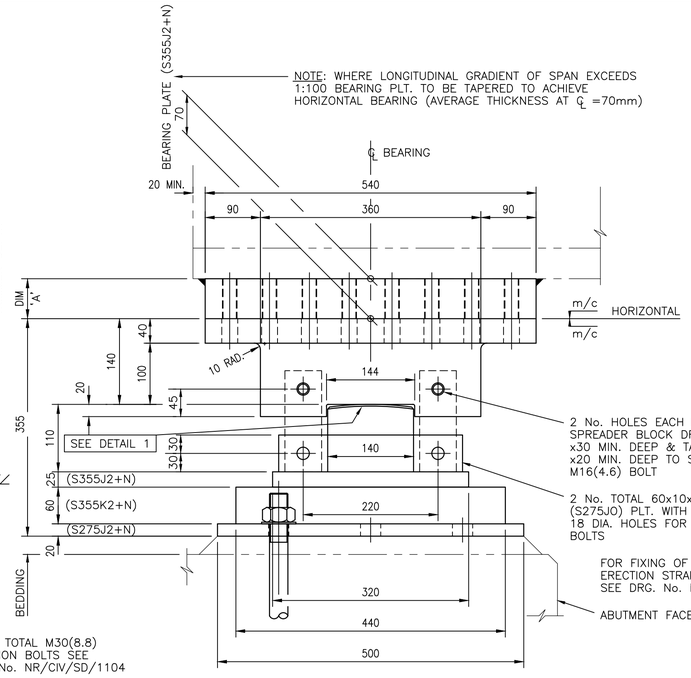

VIEW ON A–A

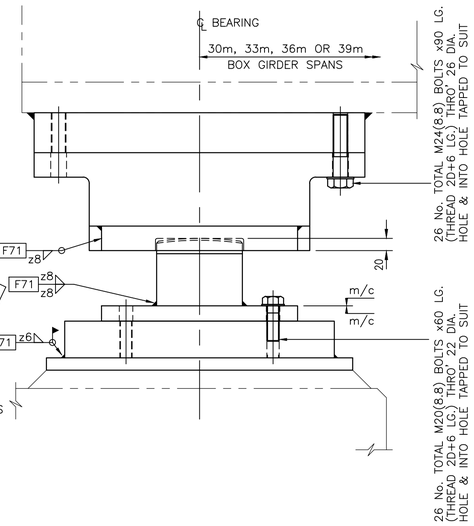

SECTION B–B

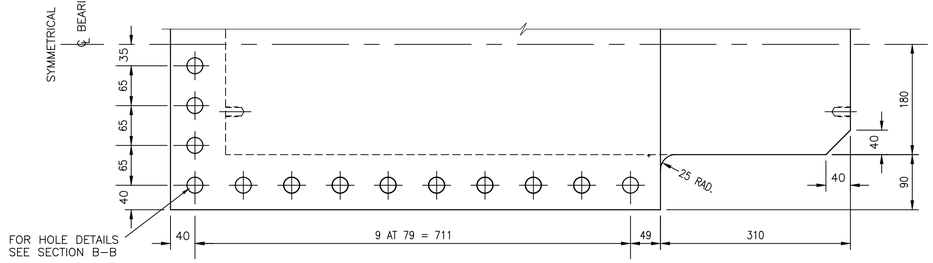

HALF SECTION C–C
ON MACHINED SPREADER BLOCK

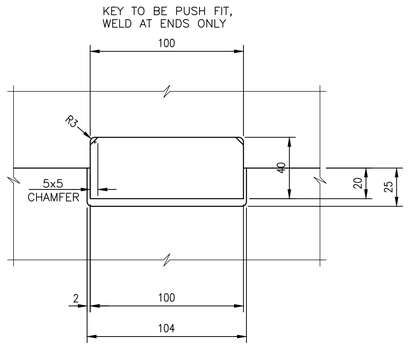

KEY
(S355J2)

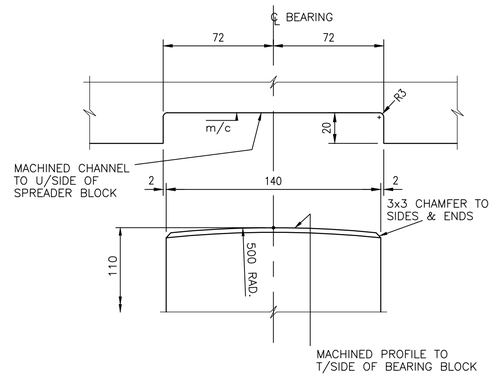

DETAIL 1
(EXPLODED)

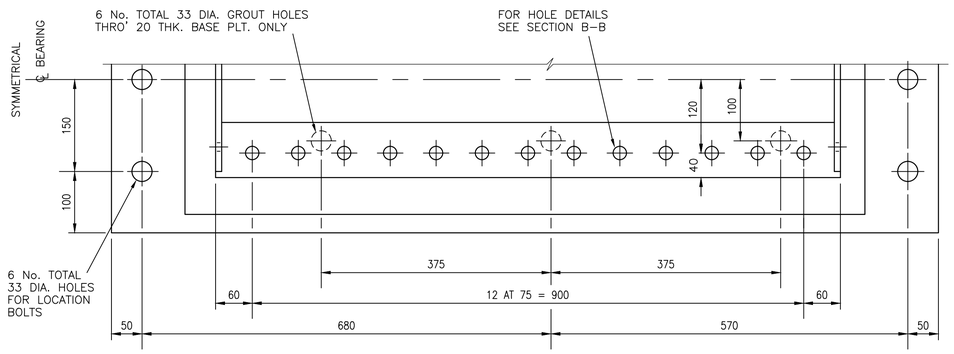

HALF SECTION D–D

Rev	Date	Description of revision	Design'd	C'kd
B	Dec 10	EUROCODE ISSUE	CH	MM
A	Dec 09	ORIGINAL ISSUE	CH	MM

Network Rail
Network Rail Infrastructure Ltd
Registered Office:
Kings Place
90 York Way
London
N1 9AG

Approved	P Clark	Senior Programme Engineering Manager (Building & Civils)	P.C.	Dec–10
	Name	Position	Signature	Date

Master copy with original signatures held by Network Rail HQ
CIVIL ENGINEERING STANDARD DESIGN
© COPYRIGHT NETWORK RAIL 2009

STANDARD HALF THROUGH UNDERBRIDGES BOX GIRDERS & TRANSVERSE RIBBED FLOORS

DOUBLE TRACK – 2 GIRDERS

BEARINGS – FIXED END 30,33,36&39m SPANS

Scale	1:5, 1:2	
Drawing Number	NR/CIV/SD/1101	B

Full document details: NR NR-CIV-SD-1101SSUE B 2010
Documents
Document Sharing Hub
Licensee=Halcon Willowcroft/5956100, User=sam, sfirst
Not to be republished © Copyright Network Rail
Copyright Network Rail
Provided by IHS under licence with Network Rail
Not to be republished © Copyright Network Rail
Downloaded on 2010-10-13 Licence expiry 2011-01-01