Supplementary Information

The following information is associated with Network Rail Standard:
NR CIV/SD/1102 Rev B

Additional Content Access

Click the link below to access CAD version of this drawing.

CAD Drawing

- CIV/SD/1102

If you have any questions, or need assistance, please contact **IHS Support**

Information accessed via the links above is the property of the Copyright holder

IHS Additional Content Page

Documents
Document Sharing Hub

Copyright Network Rail
Provided by IHS under license with Network Rail
No reproduction or networking permitted without license from IHS
Full document details: NR NR-CIV-SD-1102 ISSUE B 2010

Licensee=Weston Williamson/5989497001, User=sam, albett
Not for Resale, 03/27/2016 21:06:45 MDT

DRAWING No. NR/CIV/SD/1102

TABLE OF DIMENSIONS			
DIM.	21m SPAN	24m SPAN	27m SPAN
'A'	50	50	55
'B'	0	0	40

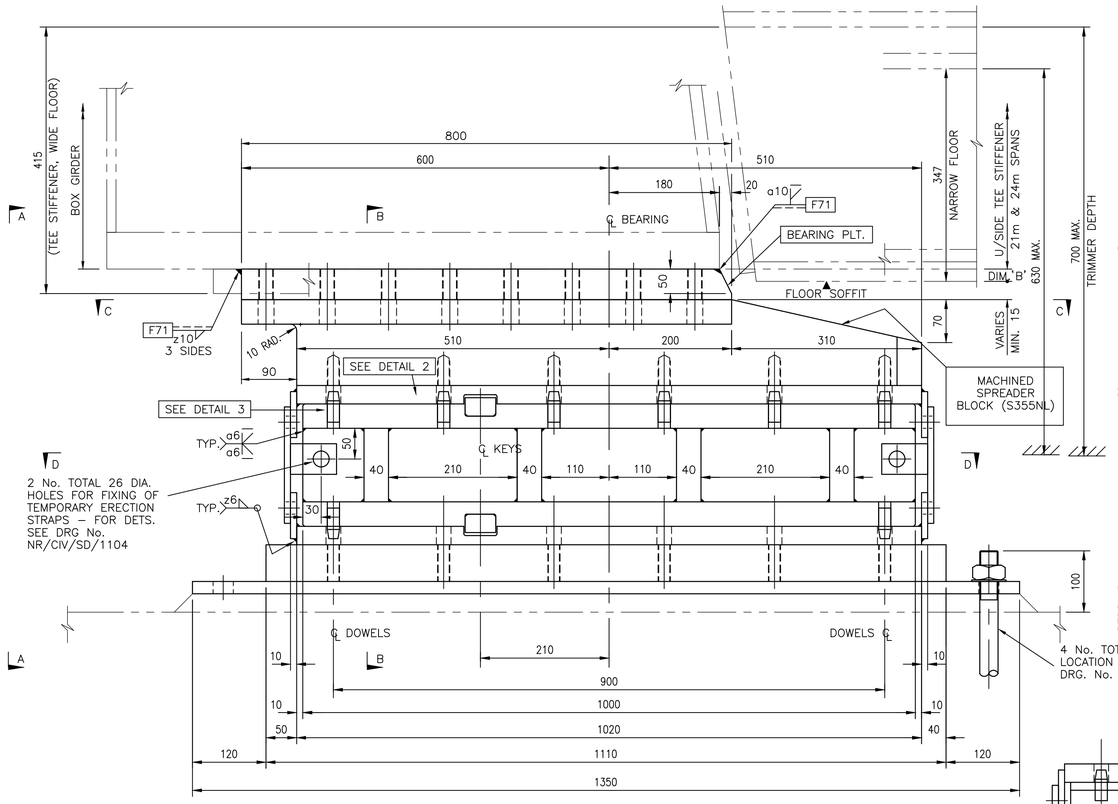

TRANSVERSE ELEVATION ON
'FREE END' BEARING
FOR 21m, 24m & 27m SPANS

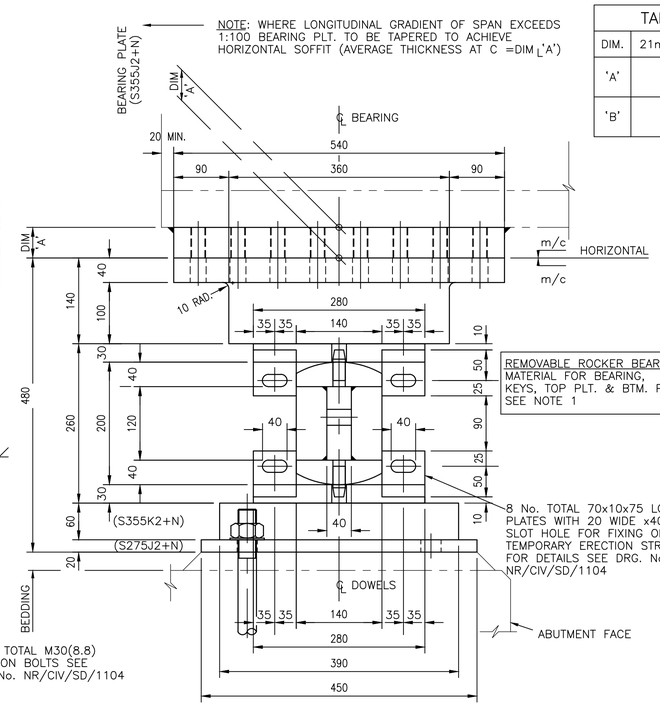

VIEW ON A–A

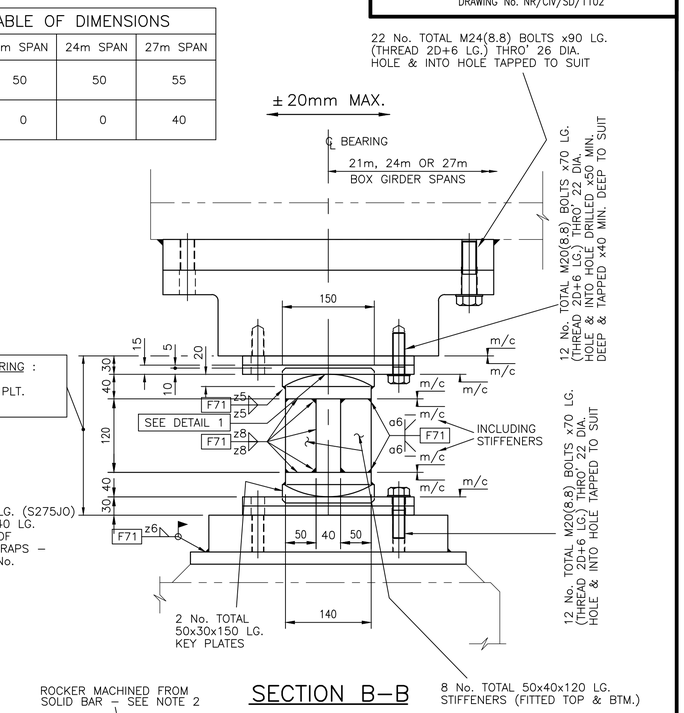

SECTION B–B

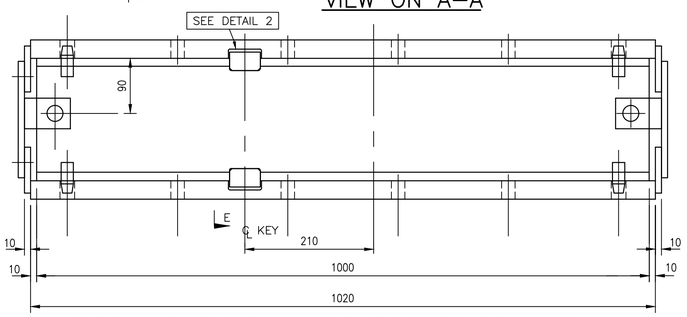

ALTERNATIVE REMOVABLE ROCKER BEARING
ALL DETAILS AS SHOWN IN TRANSVERSE ELEVATION UNLESS NOTED OTHERWISE

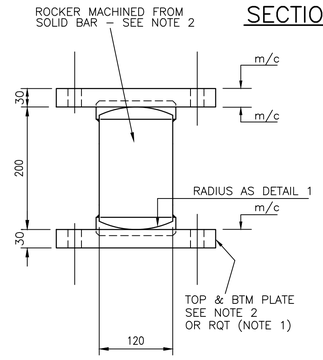

SECTION E–E

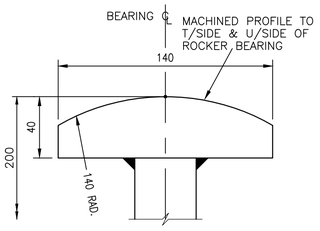

DETAIL 1

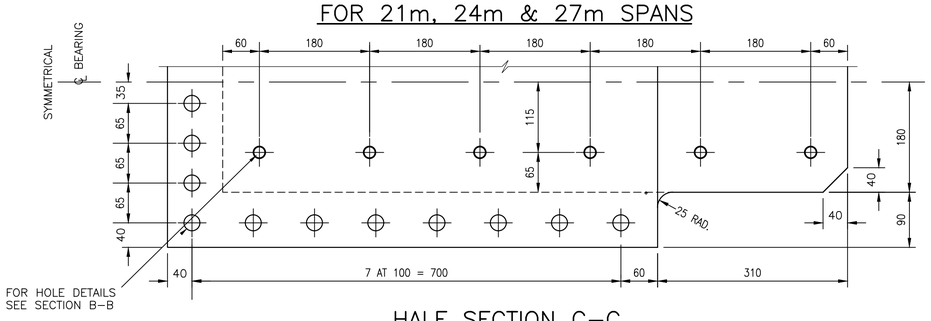

HALF SECTION C–C

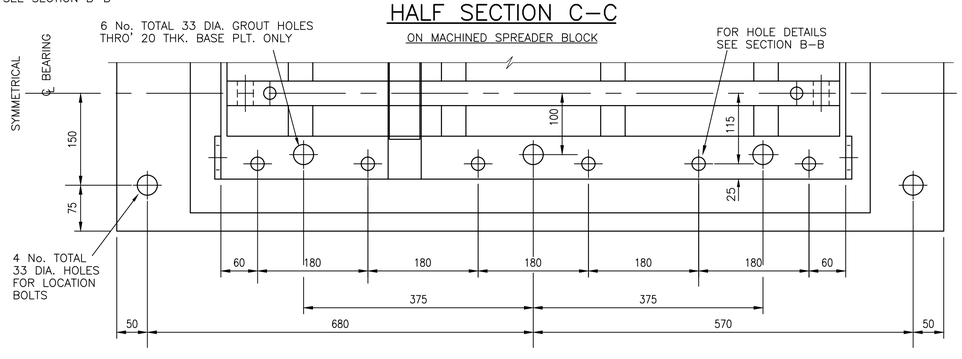

HALF SECTION D–D

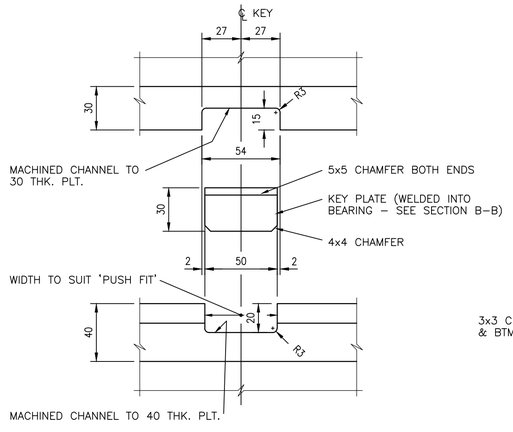

DETAIL 2
(EXPLODED)
LOWER KEY DETAILS SIMILAR

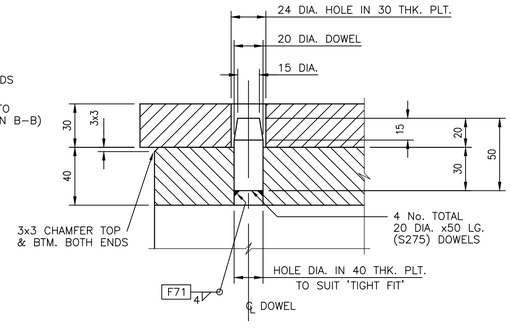

DETAIL 3
TYPICAL DOWEL DETAILS

1. QUENCH TEMPERED STEEL :
YIELD = 600N/mm²
ULTIMATE = 790/930 N/mm²
MINIMUM CHARPY VEE NOTCH – 27J AT –45°C
WELDING PROCEDURES TO BE IN ACCORDANCE WITH SUPPLIERS RECOMMENDATIONS.

2. MATERIAL FOR ALTERNATIVE ROCKER TO BE:
STEEL TO BS EN 10083-1-1.6582+QT (WAS 817M40'T' CONDITION TO BS 970).

Rev	Date	Description of revision	Design'd	C'kd
B	Dec 10	EUROCODE ISSUE	CH	MM
A	Dec 09	ORIGINAL ISSUE	CH	MM

Network Rail
Network Rail Infrastructure Ltd
Registered Office:
Kings Place
90 York Way
London
N1 9AG

Approved	P Clark	Senior Programme Engineering Manager (Building & Civils)	P.C.	Dec–10
	Name	Position	Signature	Date

Master copy with original signatures held by Network Rail HQ
CIVIL ENGINEERING STANDARD DESIGN

© COPYRIGHT NETWORK RAIL 2009

STANDARD HALF THROUGH UNDERBRIDGES
BOX GIRDERS & TRANSVERSE RIBBED FLOORS

DOUBLE TRACK – 2 GIRDERS

BEARINGS – FREE END
21m,24m&27m SPANS

Scale	1:5, 1:2	
Drawing Number	NR/CIV/SD/1102	B

Full document details: NR NR-CIV-SD-1102 ISSUE B 2010
Documents Sharing Hub
Licensee:Network Rail Infrastructure Limited, Licence ID:NR-CIV-SD-1102, User:sam, allnet
Copyright Network Rail
Provided by IHS under licence with Network Rail
No reproduction or networking permitted without licence from IHS