Supplementary Information

The following information is associated with Network Rail Standard:
NR CIV/SD/1104 Rev B

Additional Content Access

Click the link below to access CAD version of this drawing.

CAD Drawing

- CIV/SD/1104

If you have any questions, or need assistance, please contact **IHS Support**

Information accessed via the links above is the property of the Copyright holder

IHS Additional Content Page

--`,,,,,,`,,,,,,`,,`,,,,,,,,``--``,,`,,`,`,,`---

Documents
Document Sharing Hub

Copyright Network Rail
Provided by IHS under license with Network Rail
No reproduction or networking permitted without license from IHS
Full document details: NR NR-CIV-SD-1104 ISSUE B 2010

Licensee=Weston Williamson/5989497001, User=sam, albett
Not for Resale, 03/27/2016 21:03:47 MDT

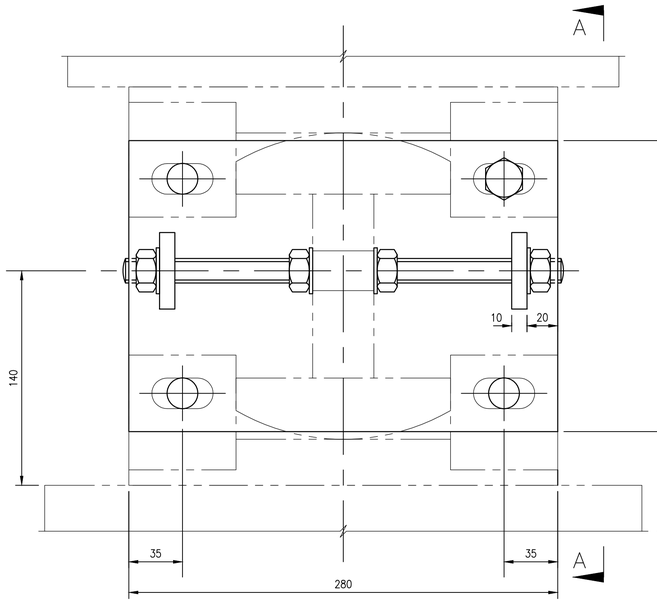

END VIEW ON BEARING

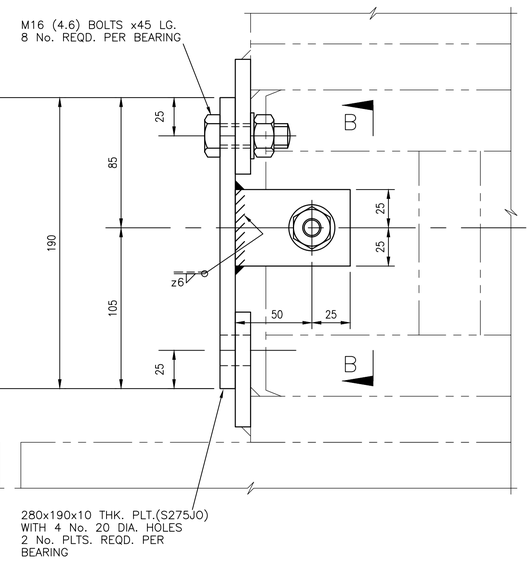

VIEW ON A–A

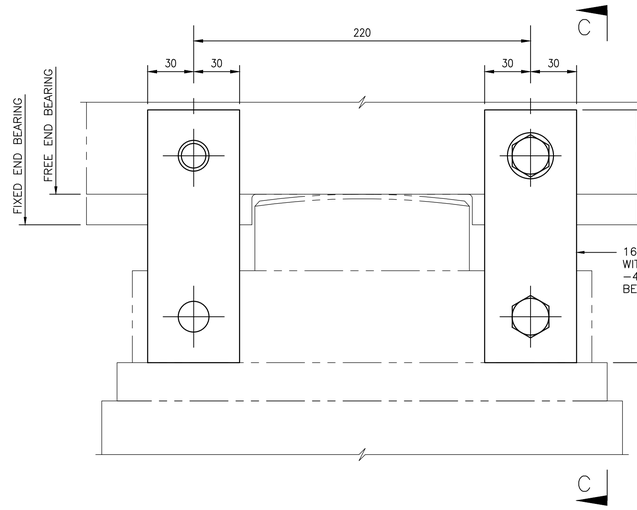

END VIEW ON BEARING

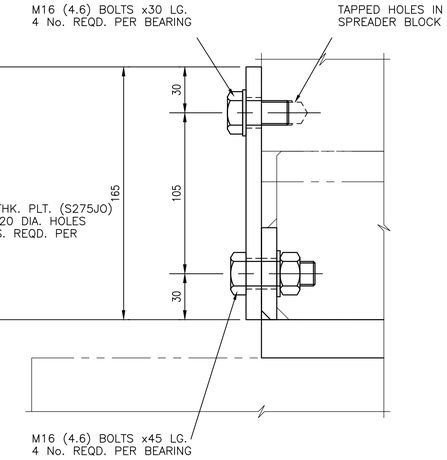

VIEW ON C–C

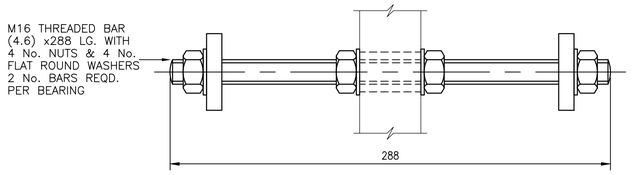

SECTION B–B

DETAILS OF TEMPORARY ERECTION STRAPS
FOR FREE END BEARINGS
21m, 24m, 27m, 30m, 33m, 36m & 39m SPANS

DETAILS OF TEMPORARY ERECTION STRAPS
FOR ALL FIXED END BEARINGS

OPTION B – BASEPLATE DIMENSIONS		
SPAN	21,24 & 27m	30,33,36 & 39m
DIM. 'B'	420	470
LENGTH	1140	1140

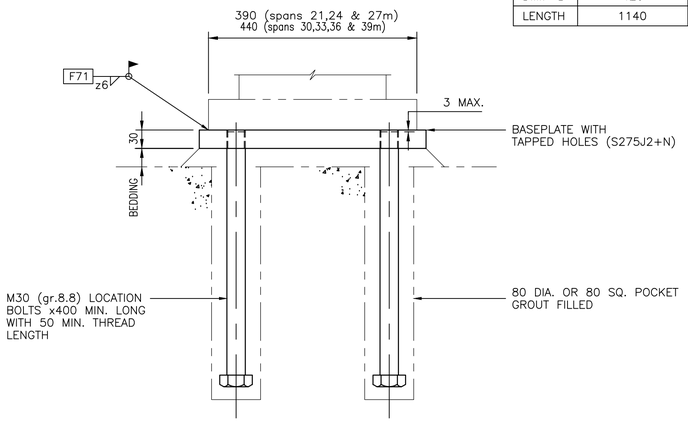

ALTERNATIVE LOCATION BOLT DETAIL – OPTION B

THIS DETAIL TO BE USED WHERE SPACE IS RESTRICTED
H.D. BOLTS ARE BELOW BEARING BOTTOM PLATE

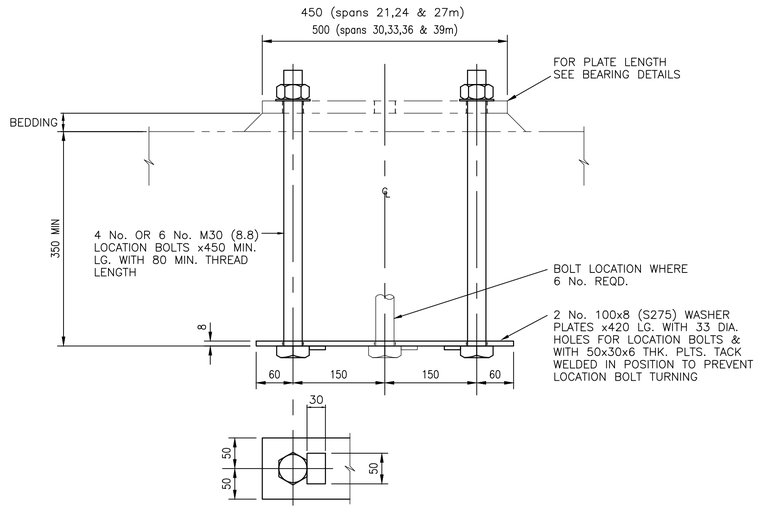

LOCATION BOLT DETAIL – OPTION A

1. ERECTION STRAPS ARE REQUIRED TO FACILITATE DELIVERY SITE ADJUSTMENT & FUTURE REMOVAL OF BEARINGS AND TO ACHIEVE ERECTION STABILITY OF MAIN GIRDERS. THEY SHALL REMAIN SECURED DURING STEELWORK ERECTION UNTIL ALL FLOOR UNITS ARE IN PLACE.
SUFFICIENT NUMBERS OF BOLTS BETWEEN BEARING PLATE/SPREADER BLOCK & BEARING/UPPER BASEPLATE SHALL BE FITTED. SITE WELDING TO LOWER BASEPLATE MAY BE COMPLETED AFTER FLOOR UNITS ARE PLACED.

2. ONE SET OF ERECTION STRAPS & FITTINGS FOR EACH DIFFERENT TYPE OF BEARING WITHIN THE BRIDGE SHALL RECEIVE THE FULL SPECIFIED PROTECTIVE TREATMENT SYSTEM & ON COMPLETION BE PLACED IN AN APPROVED LOCATION WITHIN THE STRUCTURE FOR PERMANENT MAINTENANCE USE.

3. BASE PLATE SIZE IN OPTION 'A' TO BE INCREASED TO SUIT TOLERANCES DEPENDANT ON METHOD OF BRIDGE INSTALLATION.

Rev	Date	Description of revision	Design'd	C'kd
B	Dec 10	EUROCODE ISSUE	CH	MM
A	Dec 09	ORIGINAL ISSUE	CH	MM

Network Rail

Network Rail Infrastructure Ltd
Registered Office:
Kings Place
90 York Way
London
N1 9AG

Approved	P Clark	Senior Programme Engineering Manager (Building & Civils)	P.C.	Dec–10
	Name	Position	Signature	Date

Master copy with original signatures held by Network Rail HQ
CIVIL ENGINEERING STANDARD DESIGN

© COPYRIGHT NETWORK RAIL 2009

STANDARD HALF THROUGH UNDERBRIDGES
BOX GIRDERS & TRANSVERSE RIBBED FLOORS

DOUBLE TRACK – 2 GIRDERS

BEARINGS – MISC. DETAILS

Scale	N.T.S.	
Drawing Number	NR/CIV/SD/1104	B

Full document details: NR NR-CIV-SD-1104 ISSUE B 2010
Document Shared via Hub
Copyright Network Rail
Provided by IHS under licence with Network Rail
Not to be reproduced or disclosed to a third party without licence from IHS
Licensee=Mapon Wilkinson/5959412001, User=sam, sfirst
No reproduction or networking permitted.