Supplementary Information

The following information is associated with Network Rail Standard:
NR CIV/SD/1110 Rev B

Additional Content Access

Click the link below to access CAD version of this drawing.

CAD Drawing

- CIV/SD/1110

If you have any questions, or need assistance, please contact **IHS Support**

Information accessed via the links above is the property of the Copyright holder

IHS Additional Content Page

--`,,,,,,`,,,,,,`,,`,,,,,,,,``-`-`,,`,,`,`,,`---

Documents
Document Sharing Hub

Copyright Network Rail
Provided by IHS under license with Network Rail
No reproduction or networking permitted without license from IHS
Full document details: NR NR-CIV-SD-1110 ISSUE B 2010

Licensee=Weston Williamson/5989497001, User=sam, albett
Not for Resale, 03/27/2016 21:04:32 MDT

DRAWING No. NR/CIV/SD/1110

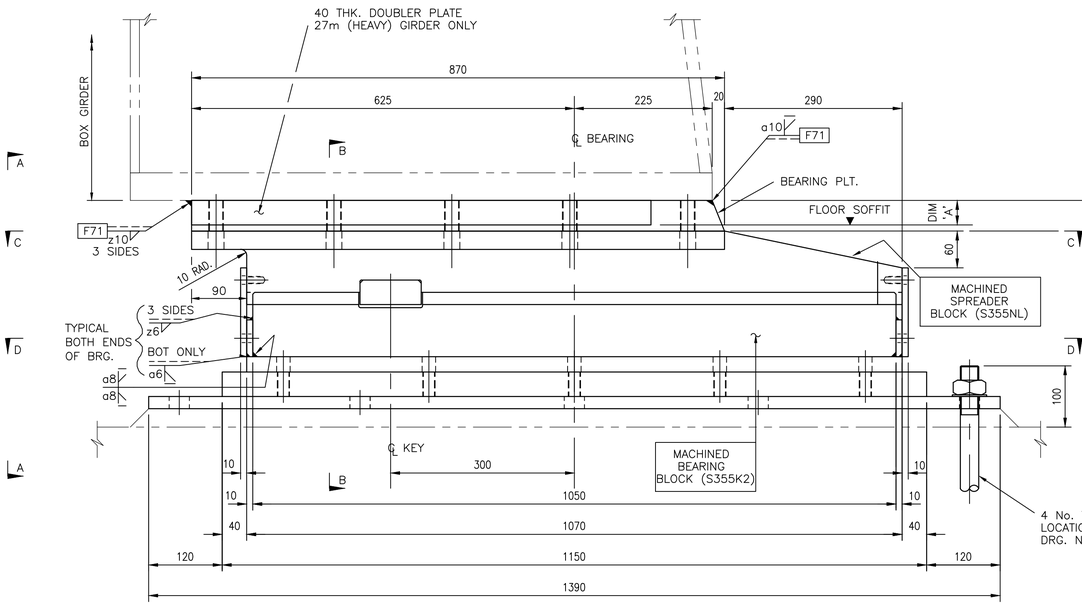

TRANSVERSE ELEVATION ON
'FIXED END' BEARING
FOR 21m, 24m & 27m SPANS

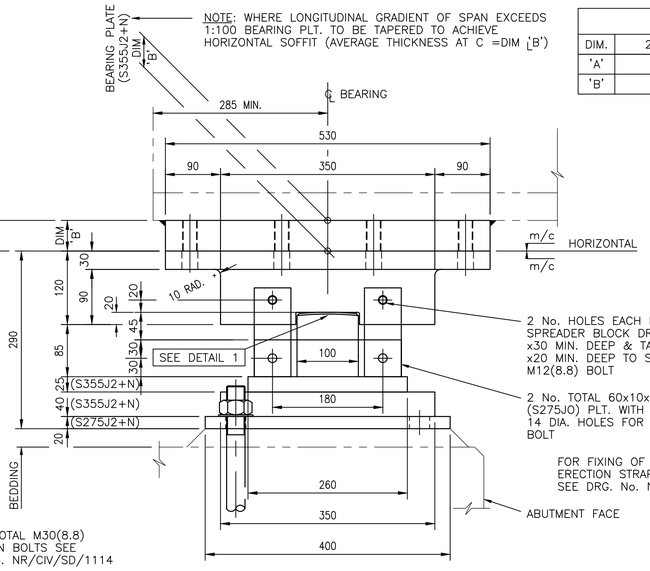

TABLE OF DIMENSIONS			
DIM.	21m SPAN	24m SPAN	27m SPAN
'A'	0	40	50
'B'	50	55	65

VIEW ON A–A

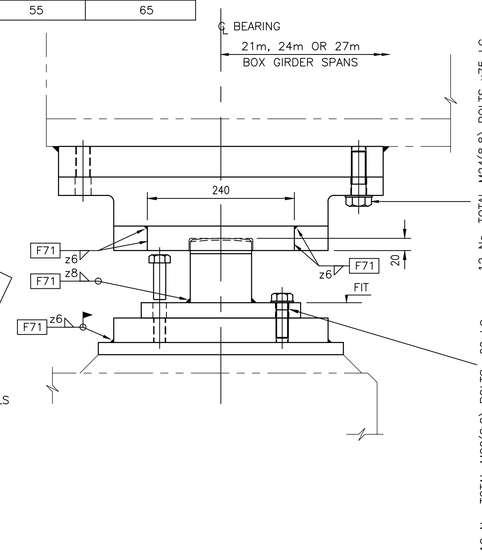

SECTION B–B

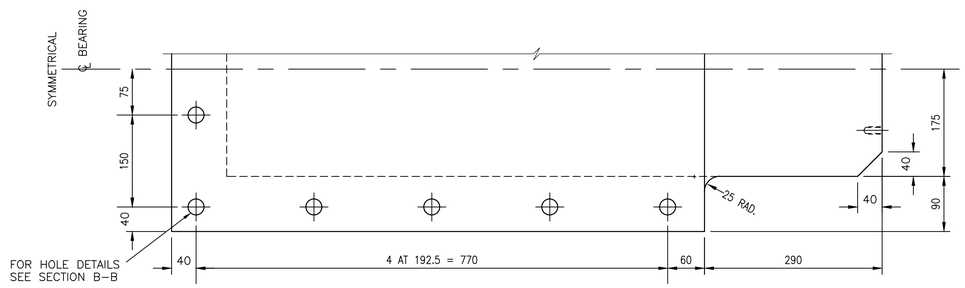

HALF SECTION C–C
ON MACHINED SPREADER BLOCK

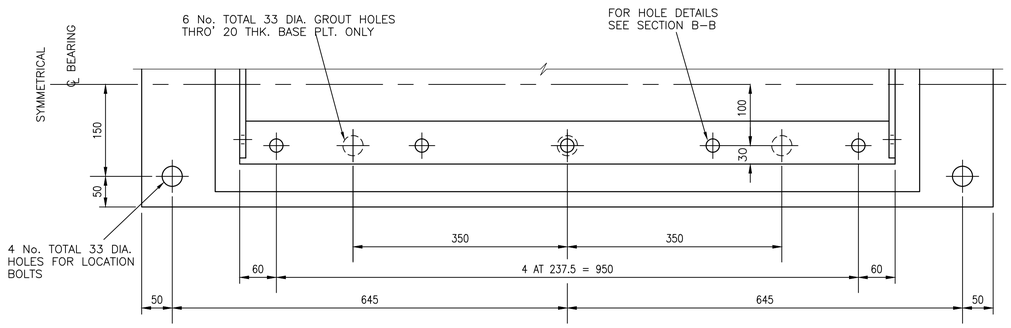

HALF SECTION D–D

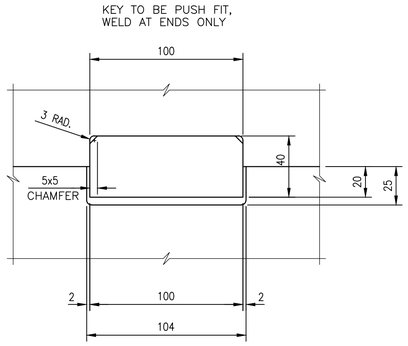

KEY
(S355J2)

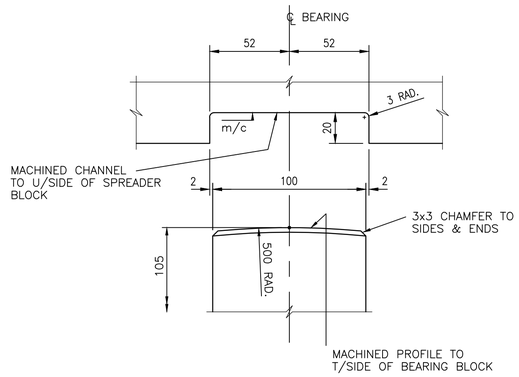

DETAIL 1
(EXPLODED)

Rev	Date	Description of revision	Design'd	C'kd
B	Dec 10	EUROCODE ISSUE	CH	MM
A	Dec 09	ORIGINAL ISSUE	CH	MM

Network Rail

Network Rail Infrastructure Ltd
Registered Office:
Kings Place
90 York Way
London
N1 9AG

Approved	P Clark	Senior Programme Engineering Manager (Building & Civils)	P.C.	Dec–10
	Name	Position	Signature	Date

Master copy with original signatures held by Network Rail HQ
CIVIL ENGINEERING STANDARD DESIGN

© COPYRIGHT NETWORK RAIL 2009

STANDARD HALF THROUGH UNDERBRIDGES
BOX GIRDERS & TRANSVERSE RIBBED FLOORS

DOUBLE TRACK – 3 GIRDERS & SINGLE TRACK – 2 GIRDERS OUTER GIRDER BEARINGS, FIXED END 21m,24m&27m SPANS

Scale	1:5, 1:2	
Drawing Number	NR/CIV/SD/1110	B

Full document details: NR NR-CIV-SD-1110 ISSUE B 2010
Documents Document Standard Hub
Licensee:Halcrow Willbroos(ID:0081202). User:sam. ahmet
Date/Time:Wed Dec 01 11:02:02 2010
Copyright Network Rail
Provided by IHS under license with Network Rail
No reproduction or networking permitted without license from IHS