Supplementary Information

The following information is associated with Network Rail Standard:
NR CIV/SD/1112 Rev B

Additional Content Access

Click the link below to access CAD version of this drawing.

CAD Drawing

- CIV/SD/1112

If you have any questions, or need assistance, please contact **IHS Support**

Information accessed via the links above is the property of the Copyright holder

IHS Additional Content Page

Documents
Document Sharing Hub

Copyright Network Rail
Provided by IHS under license with Network Rail
No reproduction or networking permitted without license from IHS
Full document details: NR NR-CIV-SD-1112 ISSUE B 2010

Licensee=Weston Williamson/5989497001, User=sam, albett
Not for Resale, 03/27/2016 21:06:24 MDT

DRAWING No. NR/CIV/SD/1112

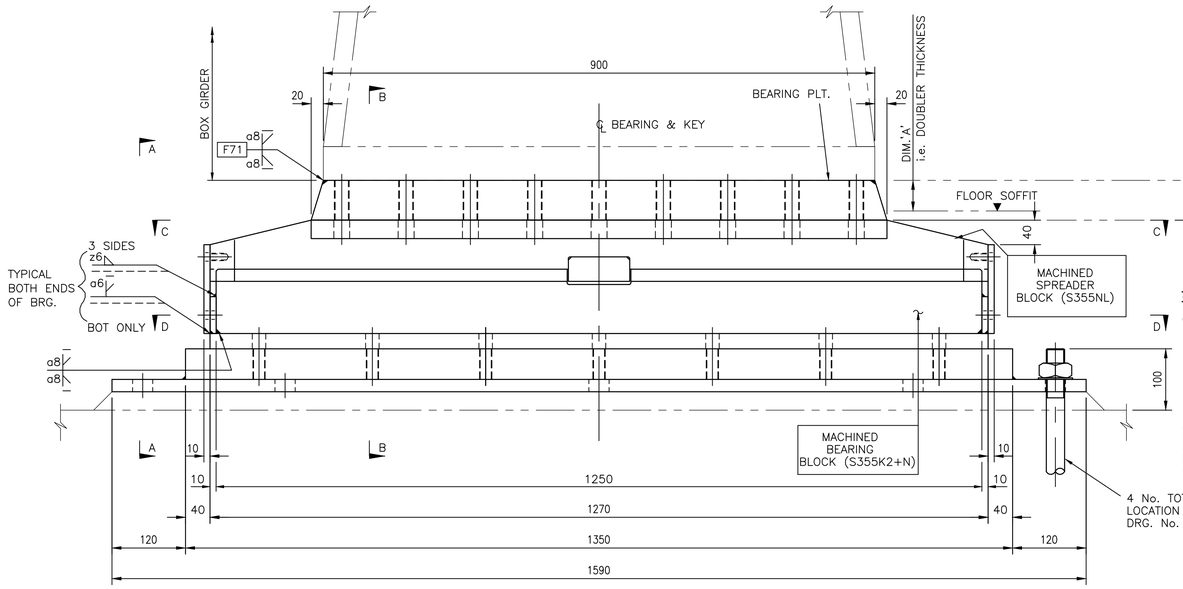

TRANSVERSE ELEVATION ON
'FIXED END' BEARING
FOR 21m, 24m & 27m SPANS

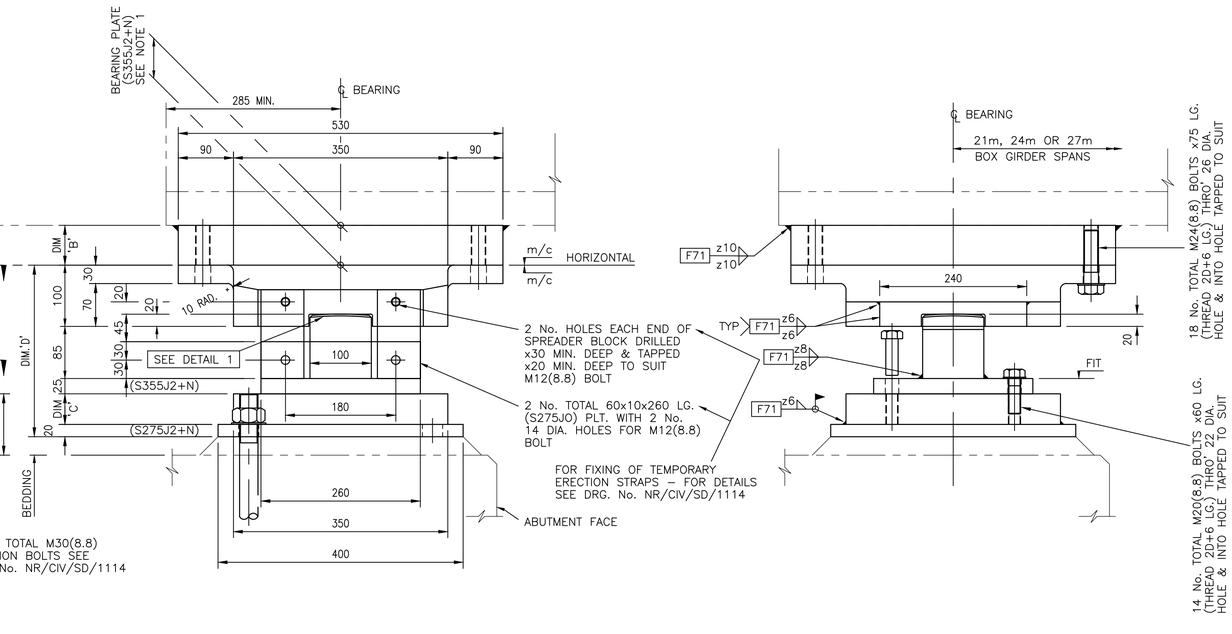

SECTION A–A

SECTION B–B

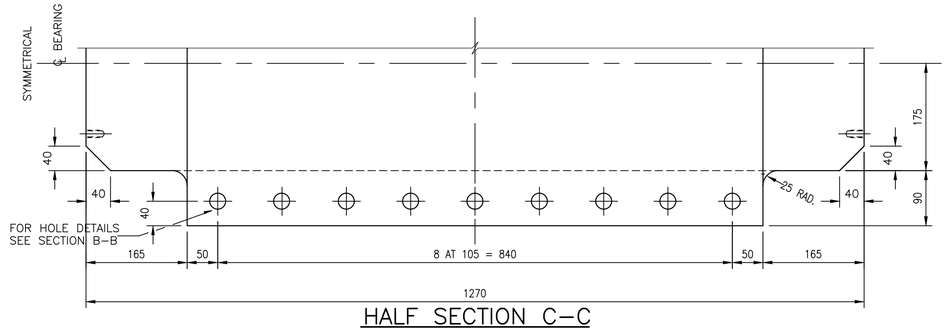

HALF SECTION C–C
ON MACHINED SPREADER BLOCK

TABLE OF DIMENSIONS			
DIM.	21m SPAN	24m SPAN	27m SPAN
'A'	0	40	50
'B'	50	55	65
'C'*	60	50	50
'D'	290	280	280

* GRADE S355K2+N

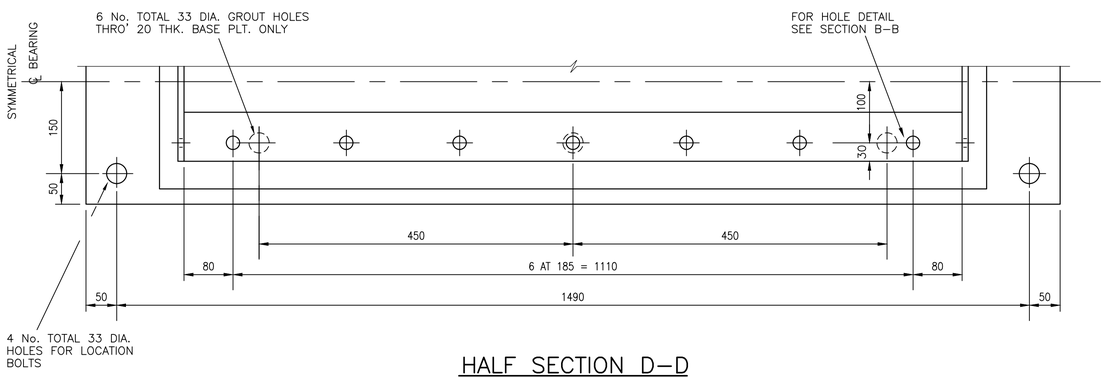

HALF SECTION D–D

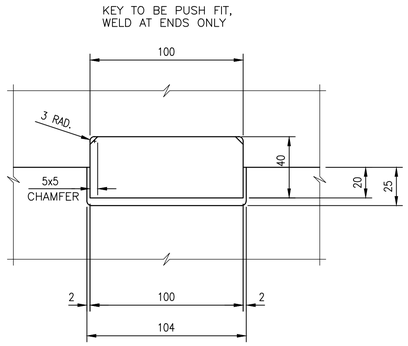

KEY
(S355J2)

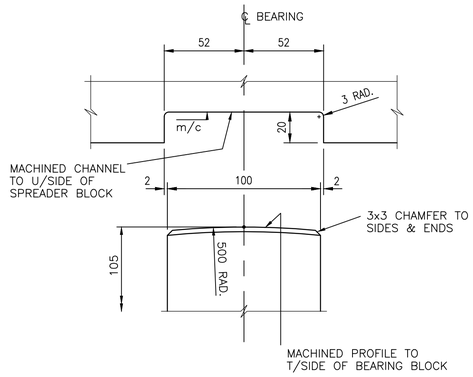

DETAIL 1
(EXPLODED)

1. WHERE LONGITUDINAL GRADIENT OF SPAN EXCEEDS 1:100, BEARING PLT. TO BE TAPERED TO ACHIEVE HORIZONTAL SOFFIT (AVERAGE THICKNESS AT ℄ = DIM. 'B').

Rev	Date	Description of revision	Design'd	C'kd
B	Dec 10	EUROCODE ISSUE	CH	MM
A	Dec 09	ORIGINAL ISSUE	CH	MM

Network Rail
Network Rail Infrastructure Ltd
Registered Office:
Kings Place
90 York Way
London
N1 9AG

Approved	P Clark	Senior Programme Engineering Manager (Building & Civils)	P.C.	Dec–10
	Name	Position	Signature	Date

Master copy with original signatures held by Network Rail HQ
CIVIL ENGINEERING STANDARD DESIGN
© COPYRIGHT NETWORK RAIL 2009

STANDARD HALF THROUGH UNDERBRIDGES
BOX GIRDERS & TRANSVERSE RIBBED FLOORS

DOUBLE TRACK – 3 GIRDERS
SINGLE TRACK – 2 GIRDERS
CENTRE GIRDER BEARINGS FIXED
END 21m,24m&27m SPANS

Scale	1:5, 1:2	
Drawing Number	NR/CIV/SD/1112	B

Full document details: NR NR-CIV-SD-1112 ISSUE B 2010
Documents Standard Hub
Copyright Network Rail
Provided by IHS under licence with Network Rail
Licensee=Atkins Williams/5966400001, User=sam, alfred
No reproduction or networking permitted without licence from IHS