Supplementary Information

The following information is associated with Network Rail Standard:
NR CIV/SD/112 Rev A

Additional Content Access

Click the link below to access CAD version of this drawing.

CAD Drawing

- CIV/SD/112

If you have any questions, or need assistance, please contact **IHS Support**

Information accessed via the links above is the property of the Copyright holder

IHS Additional Content Page

Documents
Document Sharing Hub

Copyright Network Rail
Provided by IHS under license with Network Rail
No reproduction or networking permitted without license from IHS
Full document details: NR NR-CIV-SD-112 ISSUE A 2006

Licensee=Weston Williamson/5989497001, User=sam, albett
Not for Resale, 03/28/2016 00:18:56 MDT

Full document details: NR NR-CIV-SD-112 ISSUE A 2006

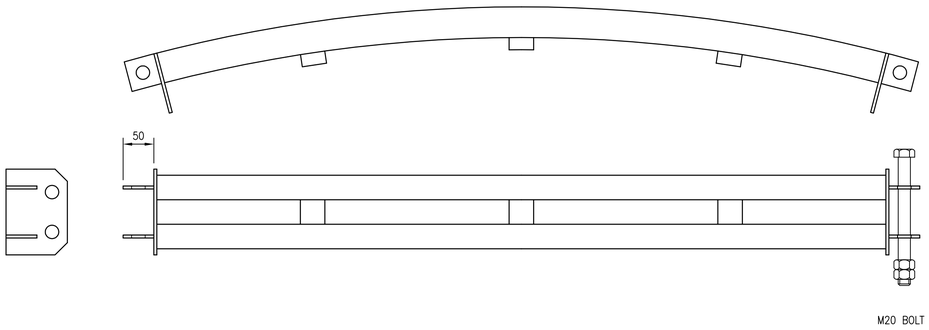

TYPICAL CENTRING RIB FOR UPPER HAUNCH AND CROWN REPLACEMENT

SCALE 1 : 5

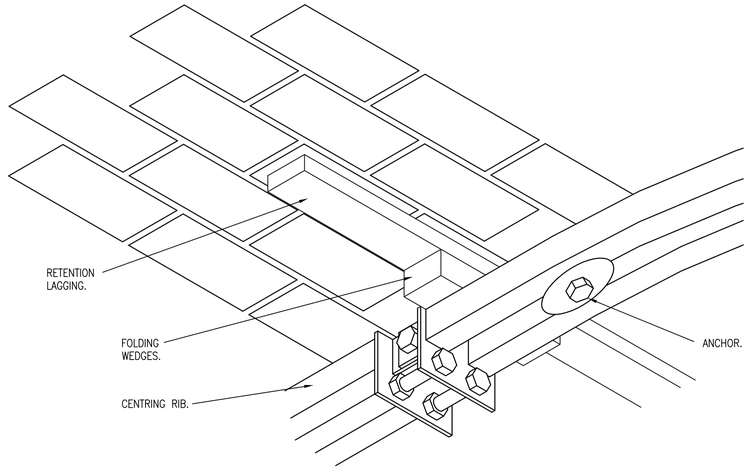

RIBS AND LAGGING ARRANGEMENT CONNECTING DETAIL

NOT TO SCALE

INSTALLATION GUIDANCE

a) TYPICAL FORMWORK COMPRISES FLAT BAR STEEL RIB CENTRE MATCHING THE PROFILE OF THE ARCH SECURED BY ANCHORS SET INTO THE SECOND OR THIRD RING DEPENDING ON THE NUMBER OF RINGS TO BE RE–CASED.

b) THE INTEGRITY OF THE BRICKWORK SURROUNDING THE REPAIR AREA IS MAINTAINED USING "RETENTIONING LAGGINGS" SUPPORTED WITH FOLDING WEDGES ON THE CENTRING RIBS. THIS DEFINES THE SPACING FOR THE "CONSTRUCTION LAGGINGS". LAGGINGS ARE PLACED PARALLEL TO THE BRICK COURSE AND SECURED IN PLACE WITH TIMBER PACKING AND FOLDING WEDGES.

THIS FORM OF CENTRING IS ONLY SUITABLE FOR RECASING REPAIR AREA IN THE LOWER HAUNCHES AND CROWN OF MINIMAL AREA AND WITHIN WHICH THE EXERTED FORCES ARE CONSIDERED NEGLIGIBLE BY THE EMPLOYERS REPRESENTATIVE (IN CORRESPONDANCE WITH THE DESIGNER). SEE DRAWING NR/CIV/SD/105.

c) PREFORMED AND JOINTED STEEL RIBS SHALL BE USED IN THE UPPER HAUNCHES AND CROWN, WHEN A MORE ROBUST CENTRING ARRANGEMENT IS REQUIRED. SEE DRAWING NR/CIV/SD/104.

d) CENTRING IS NOT REQUIRED IN VERTICAL WALLS.

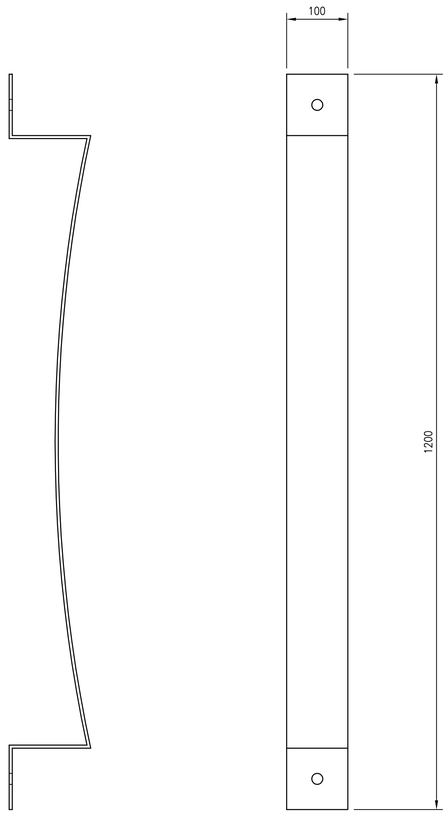

TYPICAL CENTRING FOR LOWER HAUNCH AREAS LESS THAN 1m²

SCALE 1 : 5

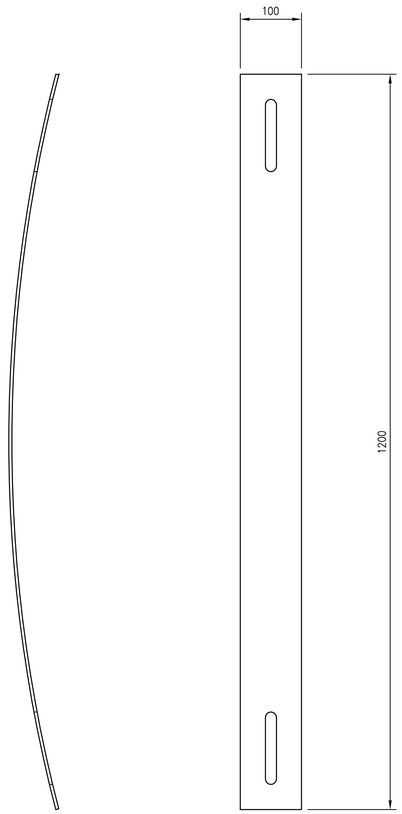

TYPICAL CENTRING FOR LOWER HAUNCH AND SINGLE RING REPLACEMENT (AND LONG LONGITUDINAL AREAS)

SCALE 1 : 5

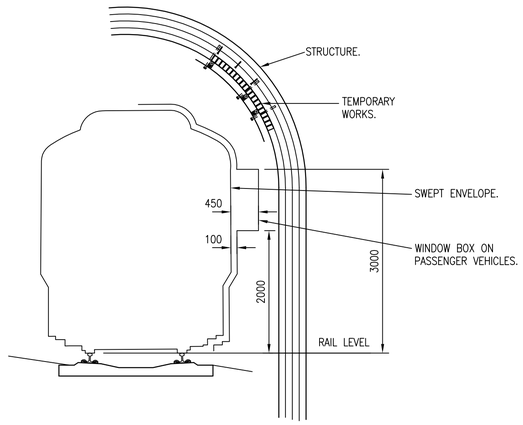

KINEMATIC GAUGES

SCALE 1 : 50

ADVISED AREA OF REPAIR :

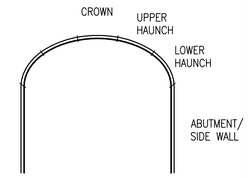

AREA APPROPRIATE FOR DETAILED REPAIR IS SHOWN BY HEAVY LINE.

DRAWING No. NR/CIV/SD/112

NOTES

SPECIFICATION

1. TEMPORARY WORKS MUST BE IN ACCORDANCE WITH THE REQUIREMENTS OF THE NETWORK RAIL SPECIFICATION NR/SP/CIV/003 TECHNICAL APPROVAL OF DESIGN, CONSTRUCTION AND MAINTENANCE OF CIVIL ENGINEERING INFRASTRUCTURE AND ARE TO BE SUBMITTED AND ACCEPTED BY NETWORK RAIL PRIOR TO ANY REPAIRS BEING CARRIED OUT.

DESIGN ASSUMPTIONS

2. THE FORM C MUST TAKE INTO ACCOUNT STRUCTURE CLEARANCES AND GAUGING GENERALLY 100mm MINIMUM OVER AND ABOVE THE SWEPT ENVELOPE FOR THE LOCATION. THIS FIGURE SHOULD INCREASE TO 450mm BETWEEN 2000 & 3000mm ABOVE THE PLANE OF THE RAILS WHERE VEHICLES WITH PASSENGER OPENING WINDOWS CAN PASS. REF RAILWAY GROUP STANDARD GC/RT5212.

3. THE SWEPT ENVELOPE FOR VEHICLES USING THE TUNNELS IS DETERMINED USING LASER RAIL OR SIMILAR IN CONSULTATION WITH THE TERRITORY GAUGING ENGINEER. THE 100 / 450mm CLEARANCES ARE ADDED TO THE SWEPT ENVELOPE TO DETERMINE WHAT THICKNESS TEMPORARY WORKS ARE PERMITTED TO BE USED. THE REMAINING SPACE IS THEN AVAILABLE FOR THE TEMPORARY WORKS.

4. TEMPORARY WORKS DETAILS AND NOTES ON THIS AND RELATED DRAWINGS ARE INDICATIVE ONLY AND ARE MEANT FOR GUIDANCE. FOR EACH PARTICULAR PROJECT, THE CONTRACTOR MUST SATISFY HIMSELF AND THE EMPLOYERS REPRESENTATIVE THAT ALL TEMPORARY WORKS ARE CORRECTLY DESIGNED FOR THE EXPECTED LOADING CONDITIONS.

RISK ASSESSMENT

REFER TO DRAWING NR/CIV/SD/101.

Rev	Date	Description of revision	Design'd	C'kd
A	22.06.06	FIRST ISSUE –NR APPROVED	RMA	NGAY
P3	17.03.06	REVISED FORM B.	RMA	NGAY
P2	31.01.06	FORM B ISSUE.	RMA	NGAY
P1	13.01.06	PRELIMINARY DRAFT	RMA	NGAY

Network Rail
40 Melton Street
London NW1 2EE
Tel: 020–7557–8000

	Name	Position	Signature	Date
Approved	P. CLARK	Programme Eng. Manager Civils, MP & I	PC	25.05.06
Authorised	K. TEAGER	Director of Civil Engineering	KT	08.06.06

Master copy with original signatures held by Network Rail HQ CIVIL ENGINEERING STANDARD DESIGN

© COPYRIGHT NETWORK RAIL 2006

BRICK AND MASONRY REPAIR STANDARD DRAWINGS

TEMPORARY WORKS ARRANGEMENTS

Scale	AS SHOWN	
Drawing Number	NR/CIV/SD/112	REV. A

Document Shared Hub
Documents
Copyright Network Rail
Provided by NRS under licence with Network Rail
Downloaded on 2006-06-08 by Network Rail Licence from NRS
Uncontrolled when printed.
Licence-User: TAYLOR-SSSS