Supplementary Information

The following information is associated with Network Rail Standard:
NR CIV/SD/1120 Rev B

Additional Content Access

Click the link below to access CAD version of this drawing.

CAD Drawing

- CIV/SD/1120

If you have any questions, or need assistance, please contact **IHS Support**

Information accessed via the links above is the property of the Copyright holder

IHS Additional Content Page

--`,,,,,,`,,,,,,`,,`,,,,,,,,``-`-`,,`,,`,`,,`---
Documents
Document Sharing Hub

Copyright Network Rail
Provided by IHS under license with Network Rail
No reproduction or networking permitted without license from IHS
Full document details: NR NR-CIV-SD-1120 ISSUE B 2010

Licensee=Weston Williamson/5989497001, User=sam, albett
Not for Resale, 03/27/2016 21:02:38 MDT

Full document details: NR NR-CIV-SD-1120 ISSUE B 2010

DRAWING No. NR/CIV/SD/1120

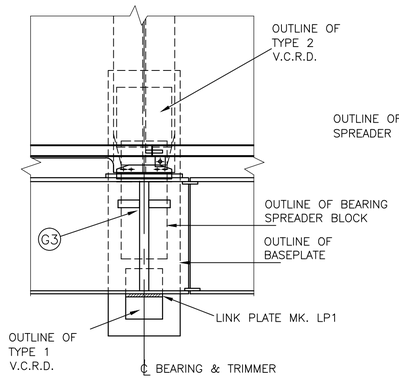

SKEW 0°

(SHOWING V.C.R.D. 1/2 ARRANGEMENT)

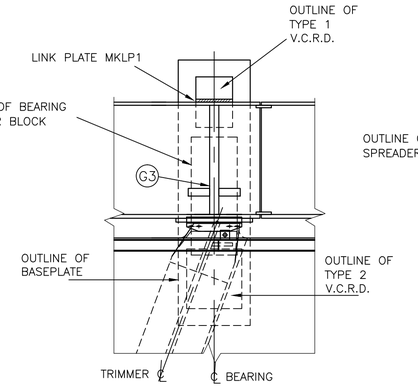

ACUTE END

(SHOWING V.C.R.D. 1/2 ARRANGEMENT)

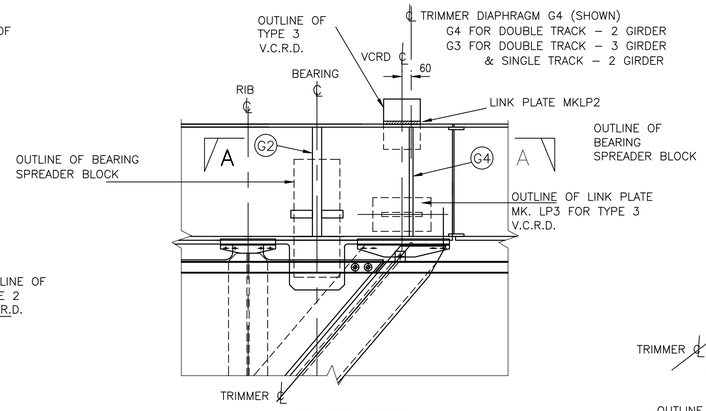

ACUTE END

(SHOWING V.C.R.D. 3/3 ARRANGEMENT)

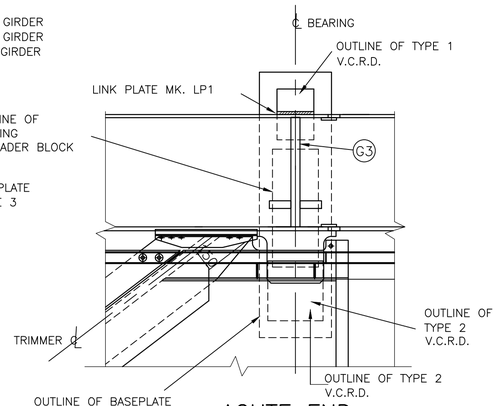

ACUTE END

(SHOWING V.C.R.D. 1/2 ARRANGEMENT)

TABLE SHOWING APPLICATION OF V.C.R.D.				
DOUBLE TRACK – 2 GIRDER				
SPAN (m)	SKEW RANGE			
	0° – 20°	20° – 40°	40° – 55°	30° – 55° ALTERNATIVE TRIMMER
21–33	V.C.R.D. TYPE 1/2	V.C.R.D. TYPE 3/3	V.C.R.D. TYPE 1/2	V.C.R.D. TYPE 1/2
33–34	V.C.R.D. NOT REQUIRED	V.C.R.D. NOT REQUIRED	V.C.R.D. TYPE 1/2	V.C.R.D. TYPE 1/2
34–39	V.C.R.D. NOT REQUIRED	V.C.R.D. NOT REQUIRED	V.C.R.D. NOT REQUIRED	V.C.R.D. NOT REQUIRED
SINGLE TRACK – 2 GIRDER DOUBLE TRACK – 3 GIRDER (OUTER GIRDERS)				
SPAN (m)	SKEW RANGE			
	0° – 30°	30° – 40°	40° – 55°	
21–27	V.C.R.D. TYPE 1/2	V.C.R.D. TYPE 1/2	V.C.R.D. TYPE 1/2	
THIS TABLE IS TO BE APPLIED TO SUPER STRUCTURES ABOVE THE HIGHWAY WHERE THE HEADROOM CLEARANCE IS LESS THAN 5.7m				
TYPE 1/2 DIMENSIONS ON DRAWING NO. NR/CIV/SD/1122 TYPE 3/3 DIMENSIONS ON DRAWING NO. NR/CIV/SD/1123				

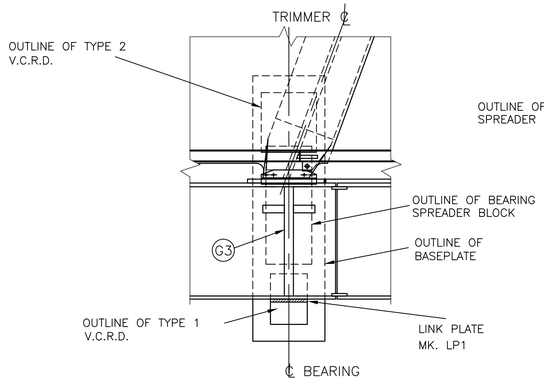

OBTUSE END

(SHOWING V.C.R.D. 1/2 ARRANGEMENT)

SKEW 0° – 20° – DOUBLE TRACK – 2 GIRDER
SKEW 0° – 30° – SINGLE TRACK – 2 GIRDER
SKEW 0° – 30° – DOUBLE TRACK – 3 GIRDER

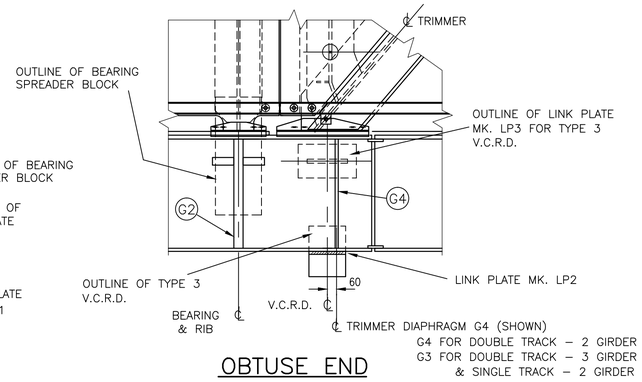

OBTUSE END

(SHOWING V.C.R.D. 3/3 ARRANGEMENT)

SKEW 20° – 40° – DOUBLE TRACK – 2 GIRDER
SKEW 30° – 40° – SINGLE TRACK – 2 GIRDER
SKEW 30° – 40° – DOUBLE TRACK – 3 GIRDER

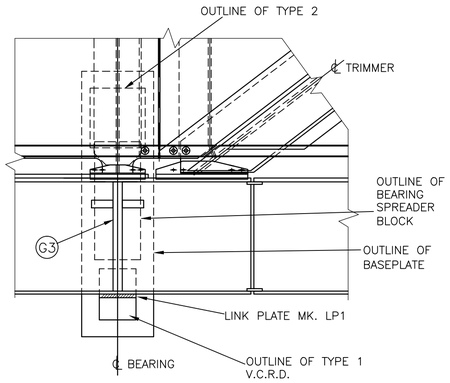

OBTUSE END

(SHOWING V.C.R.D. 1/2 ARRANGEMENT)

SKEW 40° – 55°
SKEW 30° – 55° FOR ALTERNATIVE TRIMMER DETAIL–DOUBLE TRACK 2 GIRDER (SEE NOTE 1)

TABLE SHOWING APPLICATION OF ADDITIONAL PLATE FOR TYPE 3/3.				
SINGLE TRACK – 2 GIRDER DOUBLE TRACK – 3 GIRDER (OUTER GIRDERS)				
SPAN (m)	HEAVY GIRDERS		LIGHT GIRDERS	
	t	GRADE	t	GRADE
21	20	S275 J2+N	35	S275 J2+N

TYPICAL PLAN LAYOUTS OF V.C.R.D. OVER SKEW RANGE FOR OUTER GIRDERS

(SCALE 1:20)

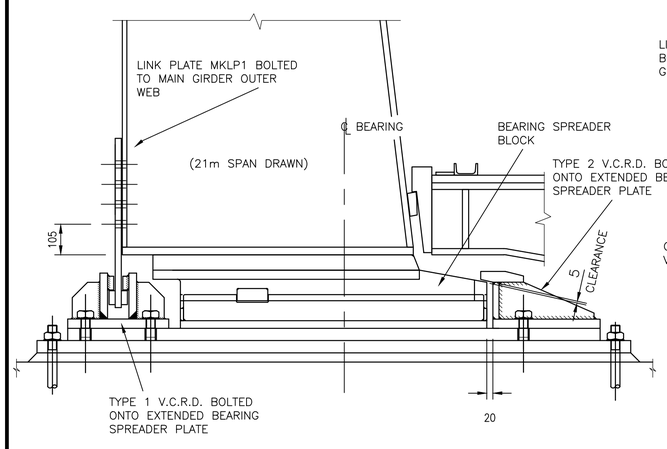

TYPICAL CROSS SECTION SHOWING TYPE 1/2 ARRANGEMENT AT OUTER GIRDERS

(SCALE 1:10)

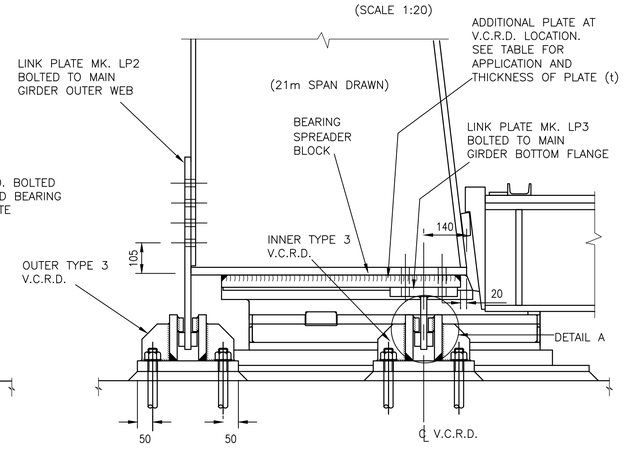

TYPICAL CROSS SECTION SHOWING TYPE 3/3 ARRANGEMENT AT OUTER GIRDERS

(SCALE 1:10)

NOTE :– TO AID INSPECTION OF THE V.C.R.D.s IT IS RECOMMENDED THAT THEY ARE ELEVATED ON CONCRETE PLINTHS

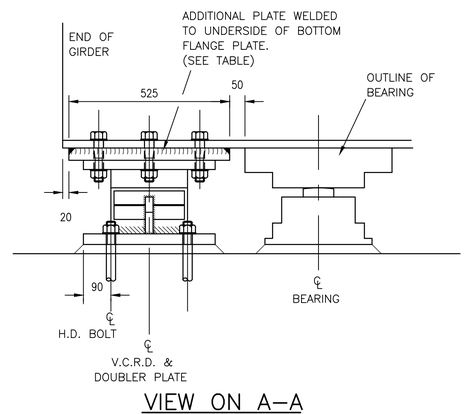

VIEW ON A–A

(SCALE 1:10)

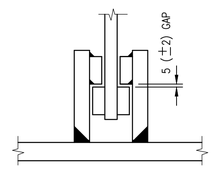

DETAIL A

INSTALLATION CLEARANCE

(SCALE 1:5)

Rev	Date	Description of revision	Design'd	C'kd
B	Dec 10	EUROCODE ISSUE	CH	MM
A	Dec 09	ORIGINAL ISSUE	CH	MM

Network Rail

Network Rail Infrastructure Ltd
Registered Office:
Kings Place
90 York Way
London
N1 9AG

Approved	P Clark	Senior Programme Engineering Manager (Building & Civils)	P.C.	Dec–10
	Name	Position	Signature	Date

Master copy with original signatures held by Network Rail HQ CIVIL ENGINEERING STANDARD DESIGN

© COPYRIGHT NETWORK RAIL 2009

STANDARD HALF THROUGH UNDERBRIDGES BOX GIRDERS & TRANSVERSE RIBBED FLOORS

SINGLE TRACK – 2 GIRDERS
DOUBLE TRACK – 2 OR 3 GIRDERS
VEHICLE COLLISION RESTRAINING DEVICE (VCRD) – GENERAL ARRANGEMENT 1

Scale	1:20, 1:10. 1:5	
Drawing Number	NR/CIV/SD/1120	B

Document Sharing Hub
Documents
Copyright Network Rail
Provided by IHS under licence with Network Rail
Licensee=Halcrow Yolande/5000841001, User=sam, allen
No reproduction or networking permitted without license from IHS