Supplementary Information

The following information is associated with Network Rail Standard:
NR CIV/SD/1121 Rev B

Additional Content Access

Click the links below to access non PDF related content associated with this standard.

Drawings

- CIVSD1121

If you have any questions, or need assistance, please contact **IHS Support**

Information accessed via the links above is the property of the Copyright holder

IHS Additional Content Page

--`,,,,,,`,,,,,,`,,`,,,,,,,,``-`-`,,`,,`,`,,`---

Documents
Document Sharing Hub

Copyright Network Rail
Provided by IHS under license with Network Rail
No reproduction or networking permitted without license from IHS
Full document details: NR NR-CIV-SD-1121 ISSUE B 2010

Licensee=Weston Williamson/5989497001, User=sam, albett
Not for Resale, 03/27/2016 21:01:48 MDT

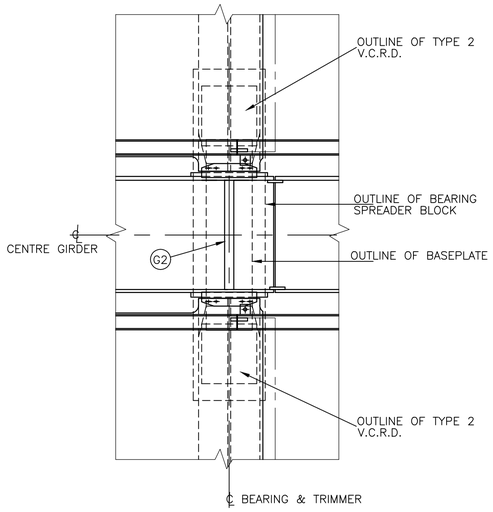

SKEW 0°
(SHOWING V.C.R.D. 2/2 ARRANGEMENT)

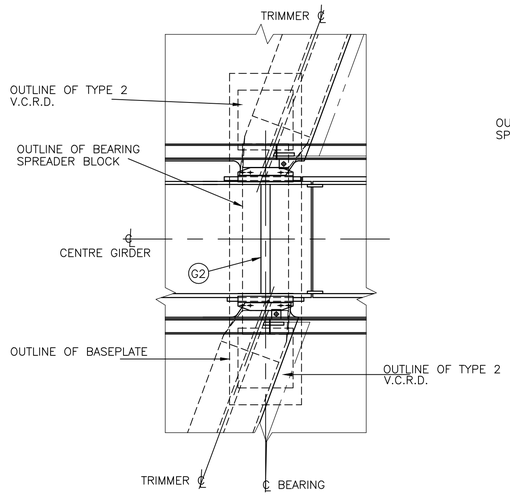

SKEW 0° – 30° DOUBLE TRACK – 3 GIRDER
(SHOWING V.C.R.D. 2/2 ARRANGEMENT)

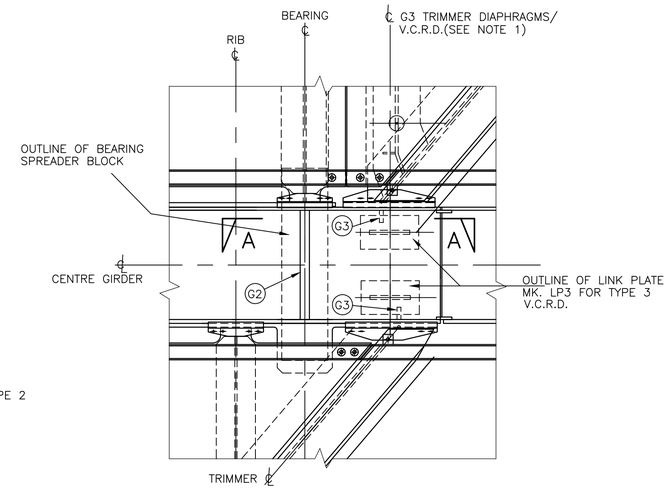

SKEW 30° – 40° DOUBLE TRACK – 3 GIRDER
(SHOWING V.C.R.D. 3/3 ARRANGEMENT)

NOTE 1:– V.C.R.D.s MAY BE OFFSET FROM THE TRIMMER DIAPHRAGM WHERE THE V.C.R.D. BOLTS CLASH

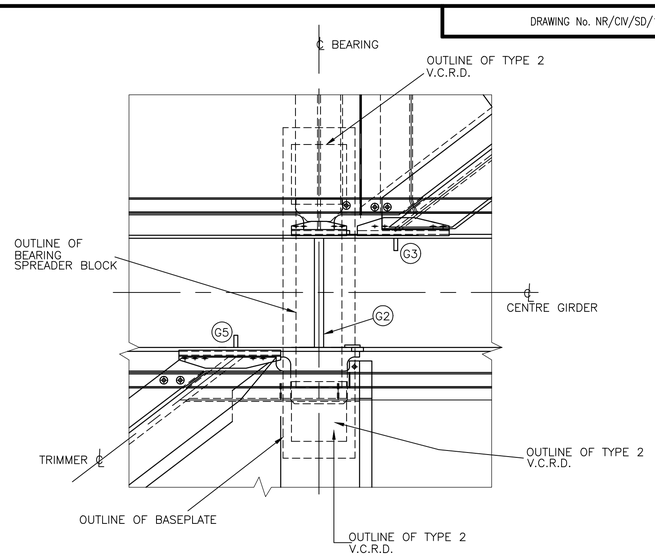

SKEW 40° – 55° DOUBLE TRACK – 3 GIRDER
(SHOWING V.C.R.D. 2/2 ARRANGEMENT)

TYPICAL PLAN LAYOUTS OF V.C.R.D. OVER SKEW RANGE FOR CENTRE GIRDERS
(SCALE 1:20)

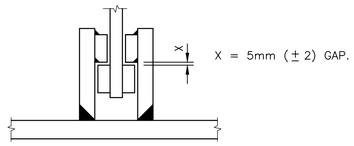

DETAIL A
INSTALLATION CLEARANCE
(SCALE 1:5)

TABLE SHOWING APPLICATION OF V.C.R.D.			
DOUBLE TRACK – 3 GIRDER (CENTRE GIRDER)			
SPAN (m)	SKEW RANGE		
	0° – 30°	30° – 40°	40° – 55°
21–27	V.C.R.D. TYPE 2/2	V.C.R.D. TYPE 3/3	V.C.R.D. TYPE 2/2
THIS TABLE IS TO BE APPLIED TO SUPER STRUCTURES ABOVE THE HIGHWAY WHERE THE HEADROOM CLEARANCE IS LESS THAN 5.7m.			
TYPE 2/2 DIMENSIONS ON DRAWING NO. NR/CIV/SD/1122 TYPE 3/3 DIMENSIONS ON DRAWING NO. NR/CIV/SD/1123			

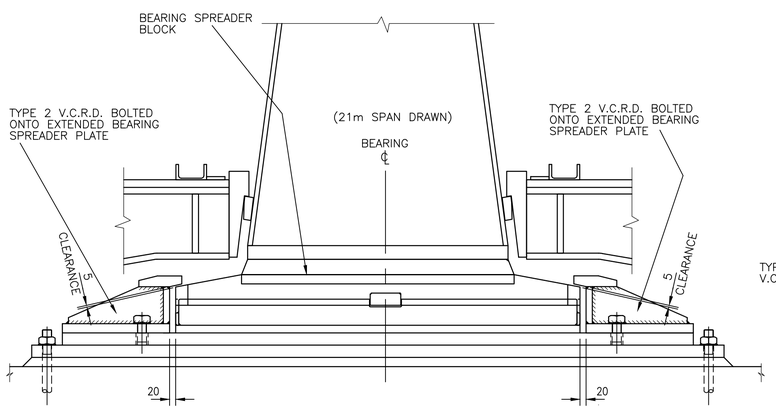

TYPICAL CROSS SECTION SHOWING
TYPE 2/2 ARRANGEMENT AT CENTRE GIRDERS
(SCALE 1:10)

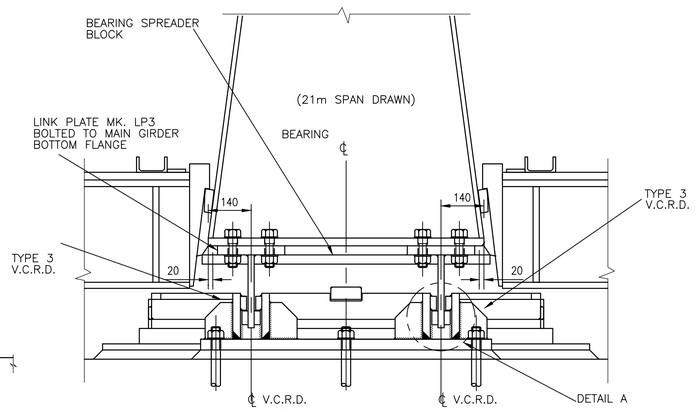

TYPICAL CROSS SECTION SHOWING
TYPE 3/3 ARRANGEMENT AT CENTRE GIRDERS
FOR SKEW RANGE 30°–40° ONLY
(SCALE 1:10)

NOTE :– TO AID INSPECTION OF THE V.C.R.D.s IT IS RECOMMENDED THAT THEY ARE ELEVATED ON CONCRETE PLINTHS.

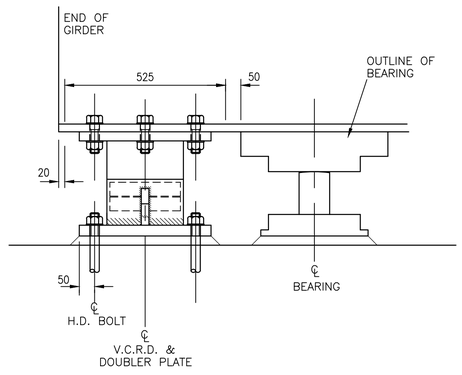

VIEW ON A–A
(SCALE 1:10)

Rev	Date	Description of revision	Design'd	C'kd
B	Dec 10	EUROCODE ISSUE	CH	MM
A	Dec 09	ORIGINAL ISSUE	CH	MM

Network Rail
Network Rail Infrastructure Ltd
Registered Office:
Kings Place
90 York Way
London
N1 9AG

Approved	P Clark	Senior Programme Engineering Manager (Building & Civils)	P.C.	Dec–10
	Name	Position	Signature	Date

Master copy with original signatures held by Network Rail HQ
CIVIL ENGINEERING STANDARD DESIGN

© COPYRIGHT NETWORK RAIL 2009

STANDARD HALF THROUGH UNDERBRIDGES
BOX GIRDERS & TRANSVERSE RIBBED FLOORS

DOUBLE TRACK – 3 GIRDER
VEHICLE COLLISION RESTRAINING DEVICE
(V.C.R.D.) – GENERAL ARRANGEMENT 2
CENTRE GIRDERS

Scale	1:20, 1:10	
Drawing Number	NR/CIV/SD/1121	B

Full document details: NR NR-CIV-SD-1121 ISSUE B 2010
Documents
Document Sharing Hub
Licensed Network Rail Infrastructure Limited 03846700, User:sam, sfirst
Copyright Network Rail
Provided by IHS under licence with Network Rail
No reproduction or distribution without permission from IHS