Supplementary Information

The following information is associated with Network Rail Standard:
NR CIV/SD/1122 Rev B

Additional Content Access

Click the link below to access CAD version of this drawing.

CAD Drawing

- CIV/SD/1122

If you have any questions, or need assistance, please contact **IHS Support**

Information accessed via the links above is the property of the Copyright holder

IHS Additional Content Page

--`,,,,,,`,,,,,,`,,`,,,,,,,,`-`-`-`,,`,,`,`,,`---

Documents
Document Sharing Hub

Copyright Network Rail
Provided by IHS under license with Network Rail
No reproduction or networking permitted without license from IHS
Full document details: NR NR-CIV-SD-1122 ISSUE B 2010

Licensee=Weston Williamson/5989497001, User=sam, albett
Not for Resale, 03/27/2016 21:02:15 MDT

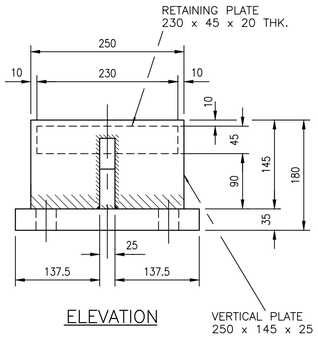

ELEVATION

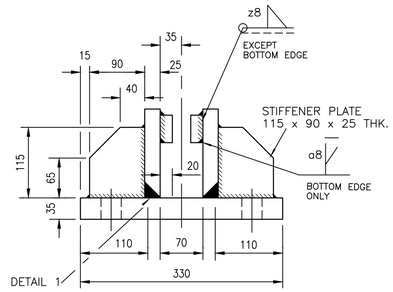

END ELEVATION

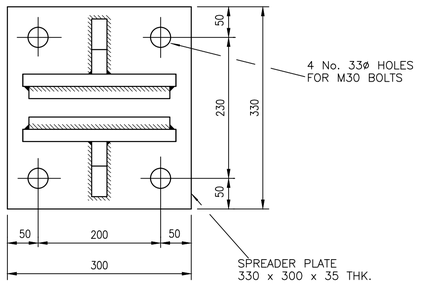

PLAN ON LOWER UNIT

DETAILS OF V.C.R.D. – TYPE 1

SCALE 1:5

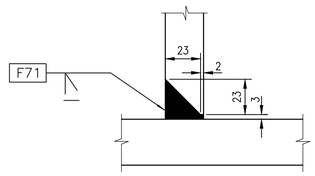

DETAIL 1

SCALE 1:2

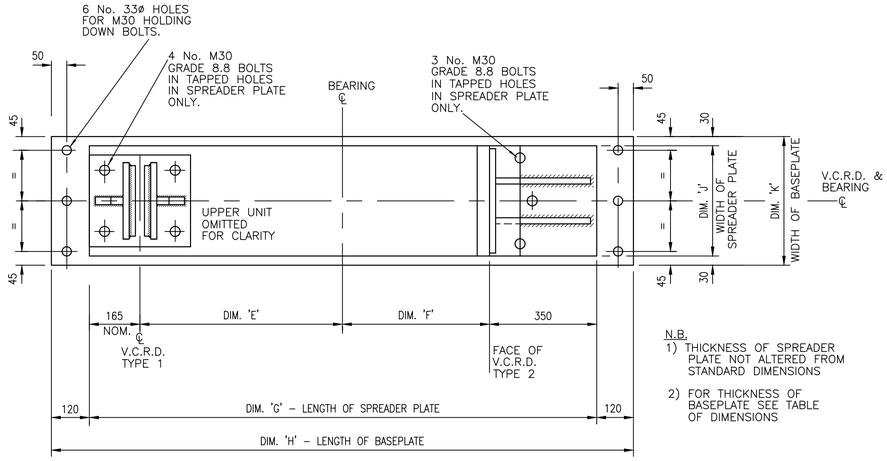

N.B.
1) THICKNESS OF SPREADER PLATE NOT ALTERED FROM STANDARD DIMENSIONS
2) FOR THICKNESS OF BASEPLATE SEE TABLE OF DIMENSIONS

PLAN ON MODIFIED BEARING SPREADER PLATE AND BASEPLATE SHOWING ARRANGEMENT OF TYPE 1 & 2 V.C.R.D. FOR OUTER GIRDERS

SCALE 1:10

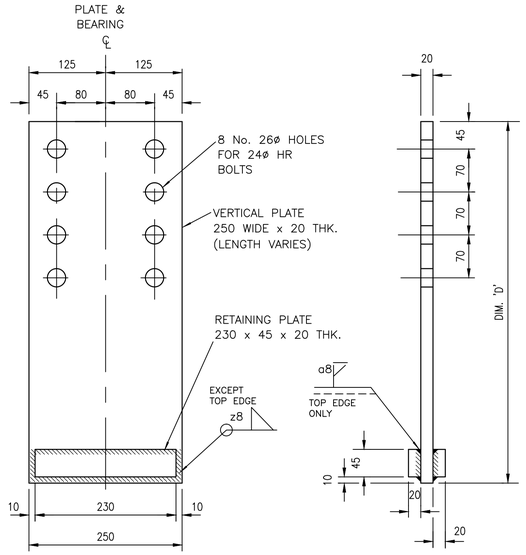

ELEVATION

END ELEVATION

DETAILS OF LINK PLATE MKLP1 FOR V.C.R.D. – TYPE 1

SCALE 1:5

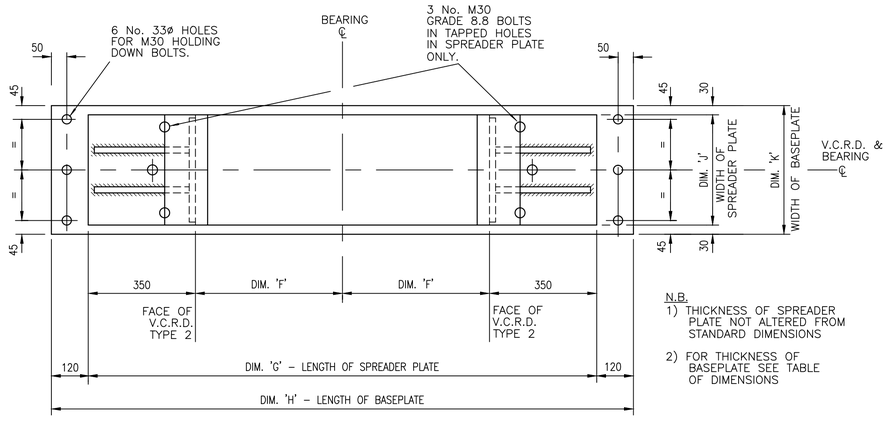

N.B.
1) THICKNESS OF SPREADER PLATE NOT ALTERED FROM STANDARD DIMENSIONS
2) FOR THICKNESS OF BASEPLATE SEE TABLE OF DIMENSIONS

PLAN ON MODIFIED BEARING SPREADER PLATE AND BASEPLATE SHOWING ARRANGEMENT OF TYPE 2 & 2 V.C.R.D. FOR CENTRE GIRDERS

SCALE 1:10

THE CONTRACTOR MAY, AT HIS OPTION, CHOOSE TO PROCURE MATERIAL WITH IMPROVED THROUGH THICKNESS PROPERTIES BY INVOLKING BS EN 1016 AS A SUPPLEMENT TO THE PRODUCT STANDARD

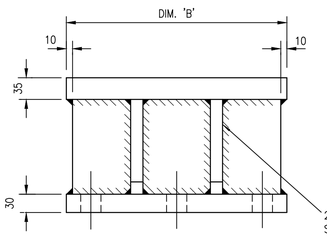

ELEVATION

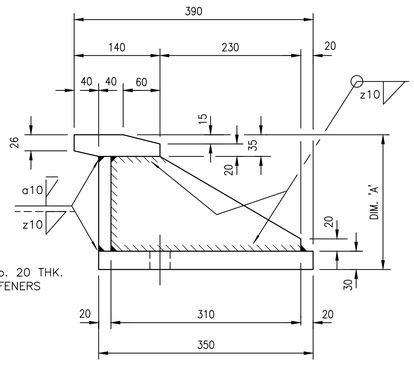

END ELEVATION

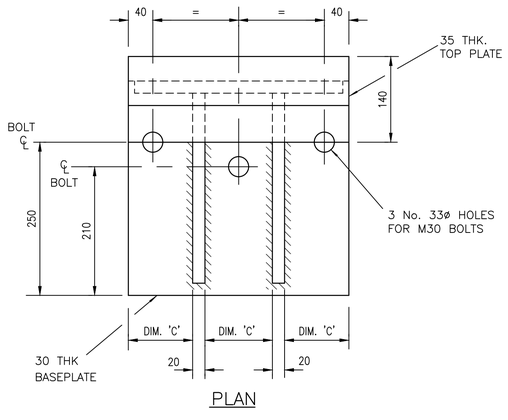

PLAN

DETAILS OF V.C.R.D. – TYPE 2

SCALE 1:5

TYPES 1/2 DEVICES – TABLE OF DIMENSIONS

	SPAN (m)	DIM 'A' FIXED END	DIM 'A' FREE END	DIM 'B'	DIM 'C'	DIM 'D' FIXED END	DIM 'D' FREE END	DIM 'E'	DIM 'F'	DIM 'G'	DIM 'H'	DIM 'J'	DIM 'K'	BASEPLATE THICKNESS
DOUBLE TRACK – 2 GIRDERS	21	231	366	360	107	610	745	830	530	1875	2115	390	450	35
	24					610	745							30
	27					615	750							30
	30	241	376			620	755	930		1975	2215	440	500	25
	33					630	765							20
	36					625	760							20
SINGLE TRACK – 2 GIRDERS*	21	205	335	350	103	575	705	735	555	1805	2045	350	410	35
	24					580	710							
	27					590	720							
DOUBLE TRACK – 3 GIRDERS: CENTRE GIRDER	21	206	326	350	103	N/A	N/A	N/A	655	2010	2250	350	410	35
	24													
	27													

* AND DOUBLE TRACK – 3 GIRDER, OUTER GIRDERS

1. ALL STEEL FOR V.C.R.D.s TO BE GRADE S355 J2+N
2. ALL WELDS TO BE 6mm FILLET WELDS UNLESS OTHERWISE STATED.

Rev	Date	Description of revision	Design'd	C'kd
B	Dec 10	EUROCODE ISSUE	CH	MM
A	Dec 09	ORIGINAL ISSUE	CH	MM

Network Rail
Network Rail Infrastructure Ltd
Registered Office:
Kings Place
90 York Way
London
N1 9AG

	Name	Position	Signature	Date
Approved	P Clark	Senior Programme Engineering Manager (Building & Civils)	P.C.	Dec–10

Master copy with original signatures held by Network Rail HQ CIVIL ENGINEERING STANDARD DESIGN

© COPYRIGHT NETWORK RAIL 2009

STANDARD HALF THROUGH UNDERBRIDGES
BOX GIRDERS & TRANSVERSE RIBBED FLOORS

DOUBLE TRACK – 2 OR 3 GIRDER
SINGLE TRACK – 2 GIRDER
VEHICULAR COLLISION RESTRAINING DEVICE
DETAILS OF TYPE 1 & 2 DEVICES

Scale	1:10, 1:5, 1:2
Drawing Number	NR/CIV/SD/1122 B

Full document details: NR NR-CIV SD-1122 ISSUE B 2010
Document Standard Hub
Documents
Licensed Helpline Website:0008481002, User:sam. ellett
Date/Time Printed:2010/12/14 15:52
Copyright Network Rail
Provided by IHS under licence with Network Rail
No reproduction or networking permitted without licence from IHS