Supplementary Information

The following information is associated with Network Rail Standard:
NR CIV/SD/1123 Rev B

Additional Content Access

Click the link below to access CAD version of this drawing.

CAD Drawing

- CIV/SD/1123

If you have any questions, or need assistance, please contact **IHS Support**

Information accessed via the links above is the property of the Copyright holder

IHS Additional Content Page

--`,,,,,,`,,,,,,`,,`,,,,,,,,`-`-`,,`,,`,`,,`---

Documents
Document Sharing Hub

Copyright Network Rail
Provided by IHS under license with Network Rail
No reproduction or networking permitted without license from IHS
Full document details: NR NR-CIV-SD-1123 ISSUE B 2010

Licensee=Weston Williamson/5989497001, User=sam, albett
Not for Resale, 03/27/2016 21:02:13 MDT

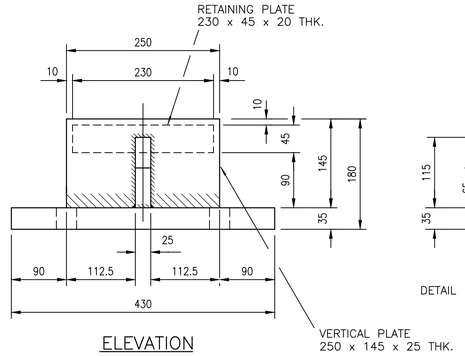

ELEVATION

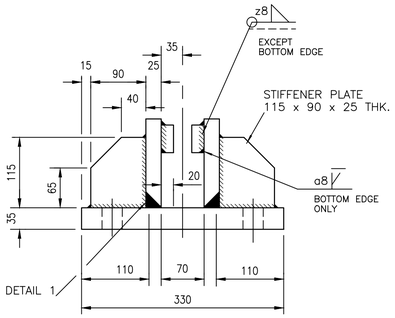

END ELEVATION

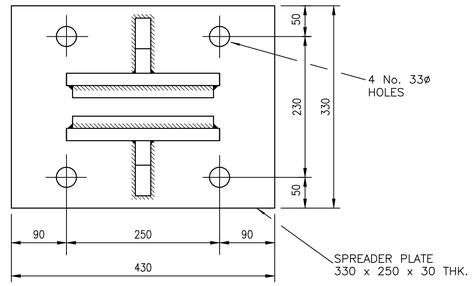

PLAN ON LOWER UNIT

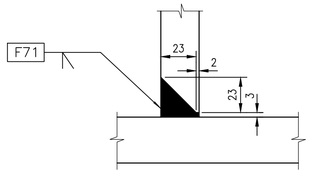

DETAIL 1
SCALE 1:2

DETAILS OF V.C.R.D. – TYPE 3
SCALE 1:5

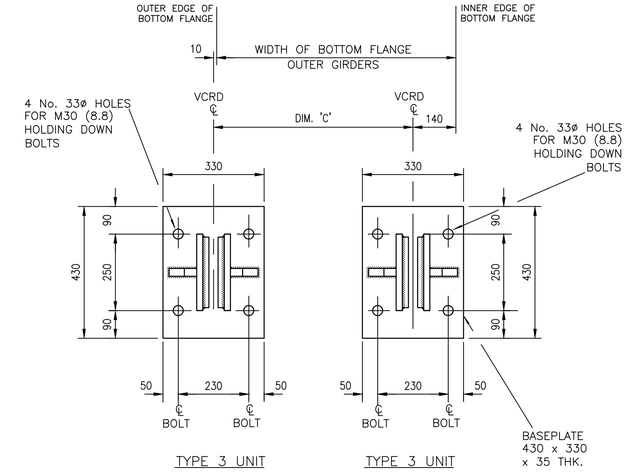

PLAN SHOWING ARRANGEMENT OF TYPE 3
V.C.R.D. FOR OUTER GIRDERS
SCALE 1:10

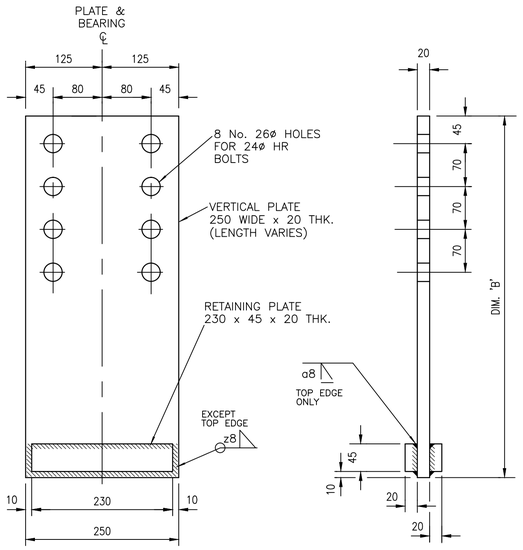

ELEVATION

END ELEVATION

DETAILS OF LINK PLATE MKLP2
FOR TYPE 3 OUTER V.C.R.D.
SCALE 1:5

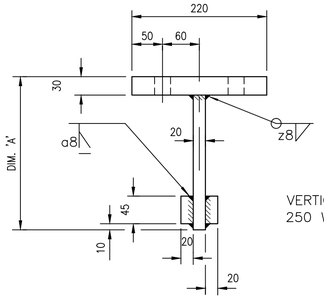

END ELEVATION

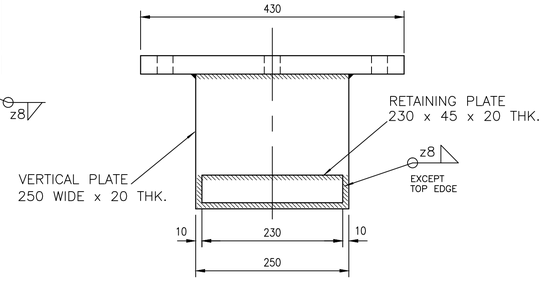

ELEVATION

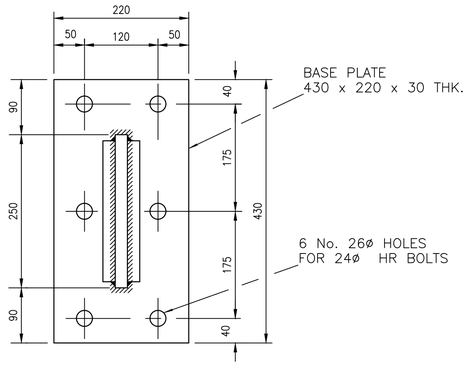

PLAN ON UPPER PART OF INNER UNIT

DETAILS OF LINK PLATE MKLP3
FOR TYPE 3 INNER V.C.R.D.
SCALE 1:5

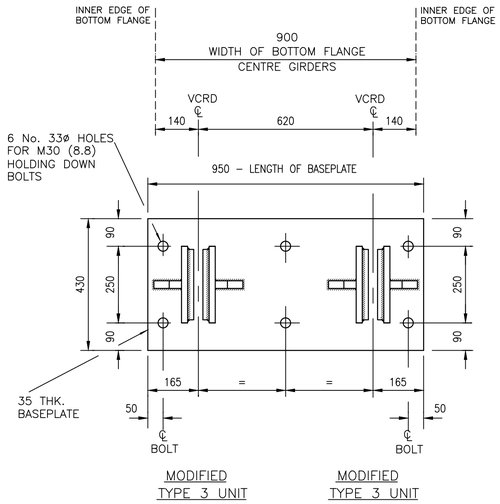

PLAN SHOWING ARRANGEMENT OF TYPE 3
V.C.R.D. FOR CENTRE GIRDERS
SCALE 1:10

TYPE 3 DEVICES – TABLE OF DIMENSIONS

	SPAN (m)	DIM 'A' FIXED END	DIM 'A' FREE END	DIM 'B' FIXED END	DIM 'B' FREE END	DIM 'C'
DOUBLE TRACK – 2 GIRDERS	21	330	465	690	825	870
	24	330	465	690	825	
	27	335	470	695	830	
	30	340	485	700	845	970
	33	350	495	710	855	
	36	345	490	705	850	
SINGLE TRACK – 2 GIRDERS*	21	240	380	635	775	820
	24	280	420	640	780	
	27	290	430	650	790	

* AND DOUBLE TRACK – 3 GIRDER, OUTER GIRDERS

DOUBLE TRACK – 3 GIRDERS: CENTRE GIRDER	21	275	415	N/A
	24	270	410	
	27	280	410	

THE CONTRACTOR MAY, AT HIS OPTION, CHOOSE TO PROCURE MATERIAL WITH IMPROVED THROUGH THICKNESS PROPERTIES BY INVOLKING BS EN 1016 AS A SUPPLEMENT TO THE PRODUCT STANDARD

1. ALL STEEL FOR V.C.R.D.s TO BE GRADE S355 J2+N
2. ALL WELDS TO BE 6mm FILLET WELDS UNLESS OTHERWISE STATED.

Rev	Date	Description of revision	Design'd	C'kd
B	Dec 10	EUROCODE ISSUE	CH	MM
A	Dec 09	ORIGINAL ISSUE	CH	MM

Network Rail
Network Rail Infrastructure Ltd
Registered Office:
Kings Place
90 York Way
London
N1 9AG

	Name	Position	Signature	Date
Approved	P Clark	Senior Programme Engineering Manager (Building & Civils)	P.C.	Dec–10

Master copy with original signatures held by Network Rail HQ
CIVIL ENGINEERING STANDARD DESIGN

© COPYRIGHT NETWORK RAIL 2009

STANDARD HALF THROUGH UNDERBRIDGES
BOX GIRDERS & TRANSVERSE RIBBED FLOORS

DOUBLE TRACK – 2 OR 3 GIRDER
SINGLE TRACK – 2 GIRDER
VEHICULAR COLLISION RESTRAINING DEVICE
DETAILS OF TYPE 3 DEVICE

Scale: 1:10, 1:5, 1:2

Drawing Number: NR/CIV/SD/1123 B

Full document details: NR NR-CIV-SD-1123 ISSUE B 2010
Documents
Document Sharing Hub
Licence-Hexon Williamson(0008/0/00). User-sam. sfirst
Copyright Network Rail
Provided by IHS under licence with Network Rail
No reproduction or networking permitted without licence from IHS