Supplementary Information

The following information is associated with Network Rail Standard:
NR CIV/SD/1130 Rev B

Additional Content Access

Click the link below to access CAD version of this drawing.

CAD Drawing

- CIV/SD/1130

If you have any questions, or need assistance, please contact **IHS Support**

Information accessed via the links above is the property of the Copyright holder

IHS Additional Content Page

Documents
Document Sharing Hub

Copyright Network Rail
Provided by IHS under license with Network Rail
No reproduction or networking permitted without license from IHS
Full document details: NR NR-CIV-SD-1130 ISSUE B 2010

Licensee=Weston Williamson/5989497001, User=sam, albett
Not for Resale, 03/27/2016 21:02:11 MDT

A. GENERAL NOTES AND QUALIFICATIONS.

1. FOR FULL DETAILS OF THE PROTECTIVE SYSTEM SEE MODEL SPECIFICATION FOR CIVIL ENGINEERING WORKS. CLAUSES APPROPRIATE TO CONTRACT.

2. MATERIALS SPECIFIED ON DRAWINGS NR/CIV/SD/1130 TO NR/CIV/SD/1133 SHALL BE USED IN ACCORDANCE WITH THE MANUFACTURER'S RECOMMENDATIONS, THE CONTRACT SPECIFICATION AND ANY SUCH FURTHER REQUIREMENTS NEEDED CONSEQUENTIAL TO THE CONTRACTOR'S RISK ASSESSMENT CARRIED OUT IN ACCORDANCE WITH THE C.O.S.H.H. REGULATIONS FOR EACH MATERIAL AND ASSOCIATED PROCESSES.

3. FOR PAINTING OF WALKWAYS REFER TO SEPARATE STANDARD DETAIL DRAWINGS. WHERE THE TOP FLANGES OF THE BOX GIRDERS PROVIDE A DEFINED WALKING ROUTE OR WALKWAY AN ANTI-SLIP SELF ADHESIVE FILM TO CIV/039 ITEM 5.12.5 SHOULD BE APPLIED TO THE PROTECTIVE COATING SYSTEM AFTER THE SYSTEM HAS FULLY DRIED AND CURED.

B. PAINTING SYSTEMS

FOR GENERAL DESCRIPTION OF SYSTEMS N1 AND N12.1 ETC. REFER TO TABLE BELOW. FOR FURTHER DETAILS REFER TO NETWORK RAIL SPECIFICATION

System Reference Number	Title	Substrate	Coats (stripe coats omitted)			
			A	B	C (Intermediate Coat)	D (Top Coat)
N1	Thermally Sprayed Metal/Epoxy Protective Treatment For external surfaces	Steel blast-cleaned to a surface standard Sa3 (BS 7079: Part A1) and a surface profile mean peak to valley height of 75-100µm	Aluminium or Zinc Thermally Sprayed Metal Coating to BS EN 22063 with minimum DFT 100µm	Item 7.1.1. Epoxy Sealer for Sprayed Metal Coating with DFT maximum 25µm	Select from the following with DFT minimum 150µm: • Item 7.1.4. High Solids Epoxy Primer • Item 7.2.1. Epoxy MIO Intermediate Coat • Item 7.2.2. Epoxy Intermediate Coat	Select from the following with DFT minimum 50µm: • Item 5.6.3. Anti-Graffiti Paint Polyurethane Coloured Finish • Item 7.3.1 Acrylic Urethane Top Coat • Item 7.3.2. Epoxy Acrylic Top Coat • Item 7.3.3. Fluoropolymer Top Coat • Item 7.3.4. Polysiloxane Top Coat
N12.1	Epoxy MIO Protective Treatment for Box Girder Interiors	Steel blast-cleaned to a surface standard Sa2½ (BS7079: Part A1) and a surface profile mean peak to valley height of 75-100µm.	Item 7.1.4. High Solids Epoxy Primer with minimum DFT 100µm		Item 7.2.1. Epoxy MIO Intermediate Coat with a minimum DFT 150µm.	
N1 (W)	Thermally Sprayed Metal/Epoxy Protective Treatment For areas receiving waterproofing treatment	Steel blast-cleaned to a surface standard Sa3 (BS 7079: Part A1) and a surface profile mean peak to valley height of 75-100µm	Aluminium or Zinc Thermally Sprayed Metal Coating to BS EN 22063 with minimum DFT 100µm	Item 7.1.1. Epoxy Sealer for Sprayed Metal Coating with DFT maximum 25µm	Select from the following with DFT minimum 150µm: • Item 7.1.4. High Solids Epoxy Primer • Item 7.2.1. Epoxy MIO Intermediate Coat • Item 7.2.2. Epoxy Intermediate Coat	

C. PAINTING SEQUENCE TO INTERNAL SURFACES

1. PRIOR TO FABRICATION, INTERNAL SURFACES OF NEW BOX GIRDERS EXCLUDING 50mm FROM ANY WELD AREAS SHALL BE BLAST-CLEANED AND PAINTED WITH THE PROTECTIVE TREATMENT N12.1.

2. AFTER FABRICATION, WELD AREAS ON THE INTERNAL SURFACES OF BOX GIRDERS SHALL BE BLAST-CLEANED TO A SURFACE STANDARD Sa2½ IN ACCORDANCE WITH BS EN ISO 8501-1, AND THE FULL COATING SYSTEM APPLIED, UNLESS OTHERWISE AGREED WITH THE ENGINEER, INCLUDING A STRIPE COAT, WHICH SHALL BE APPLIED PRIOR TO THE FINAL COAT.

3. IF TOP FLANGE, WEBS, INTERMEDIATE STIFFENERS AND INTERMEDIATE DIAPHRAGMS ARE OF STEEL WITH IMPROVED ATMOSPHERIC CORROSION RESISTANCE AND THE BUILD SEQUENCE IS BASED ON THE TOP FLANGE BEING THE CLOSURE PLATE, THEN THE TOP WELD AREA MAY REMAIN UNPAINTED AFTER BLAST CLEANING.

D. SHOP PAINTING – BOLTED CONNECTIONS.

1. AFTER RECEIVING BLAST CLEANING AND METAL SPRAY (SYSTEM N1), OR AFTER BLAST CLEANING (SYSTEM N12.1), ALL FAYING SURFACES SHOWN EITHER AS CROSSHATCHED ▨ OR INDICATED THUS |←→| TO BE MASKED AS REQUIRED TO PROTECT FROM SUBSEQUENT PAINT COATS. PAINT SYSTEMS AROUND MASKED AREAS TO BE STEPPED BACK BY FURTHER MASKING AS SHOWN IN THE DETAIL BELOW.

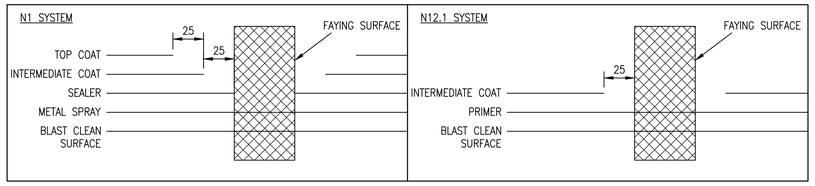

E. SITE PAINTING.

1. BOLTS AND FASTENERS: EXPOSED PARTS OF BOLTS AND FASTENERS SHALL RECEIVE THE FOLLOWING TREATMENT:
   a) FOLLOWING TIGHTENING, CLEAN EXPOSED PARTS AS NECESSARY.
   b) FOR INSIDE OF BOX APPLY SYSTEM N12.1. BOLT HEADS, NUTS, WASHERS FASTENERS AND JOINT PERIPHERY TO BE SEALED IN ACCORDANCE WITH THE SPECIFICATION.
   c) FOR OTHER AREAS APPLY SPECIFIED PAINT SYSTEM. PRIOR TO FINAL COAT, BOLT HEAD, NUTS, WASHERS, FASTENERS AND JOINT PERIPHERY TO BE SEALED IN ACCORDANCE WITH THE SPECIFICATION.

2. FOR CLAMP TYPE FASTENERS THE PROJECTING (BROKEN) END SHALL BE GROUND SMOOTH PRIOR TO APPLYING THE PROTECTIVE SYSTEM.

3. FOR DETAILS OF REMEDIAL WORK AND TOUCHING UP, SEE SPECIFICATION.

4. FOR SITE WELDED AREA OF BEARING BASEPLATES, AND ANY DAMAGED AREAS, WIRE BRUSH, BLAST CLEAN AND APPLY FULL N1 SYSTEM DURING WARM DRY WEATHER CONDITIONS. THE METAL SPRAY MUST BE APPLIED WITHIN 4 HOURS OF COMPLETION OF BLAST CLEANING. SEE SPECIFICATION FOR OTHER REQUIREMENTS.

F. PAINT SYSTEM RECORD PANEL.

1. UPON COMPLETION OF SITE PAINTING A SYSTEM RECORD IS TO BE MADE IN ACCORDANCE WITH THE SPECIFICATION.
   a) PANEL TO BE PAINTED BLACK WITH WHITE LETTERS
   b) PANEL TO BE PAINTED ON END OF ACCESS DOORS

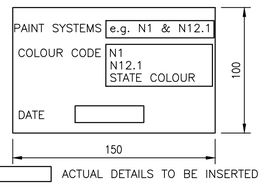

(▭ ACTUAL DETAILS TO BE INSERTED ON PANEL)

PAINT SYSTEM RECORD PANEL

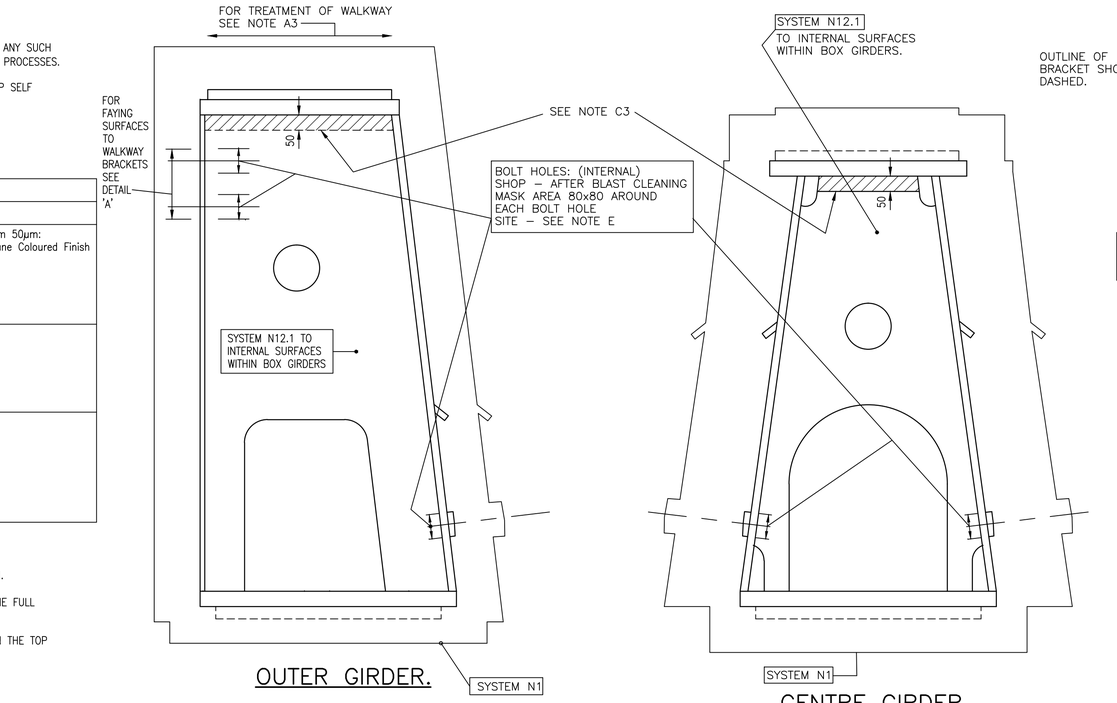

OUTER GIRDER.

CENTRE GIRDER.

CROSS-SECTION THROUGH GIRDERS.

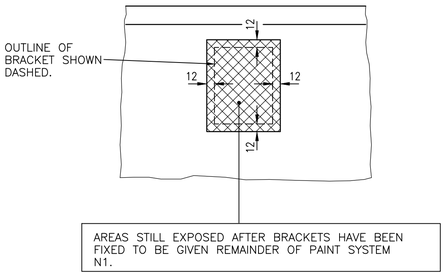

DETAIL 'A' AT WALKWAY BRACKET POSTIONS

(OUTSIDE FACE SHOWN)

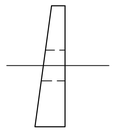

TRIMMER TO MAIN GIRDER BOLTING PLATES.

(SINGLE TRACK DECKS ONLY.)

SHOP–ALL SURFACES TO BE BLAST CLEANED AND METAL SPRAYED ONLY.

SITE– AFTER FINAL TIGHTENING OF BOLTS, TREATMENT TO BE AS NOTE E

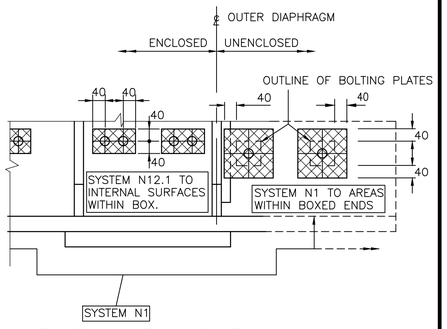

GENERALISED SECTION A–A AT GIRDER END

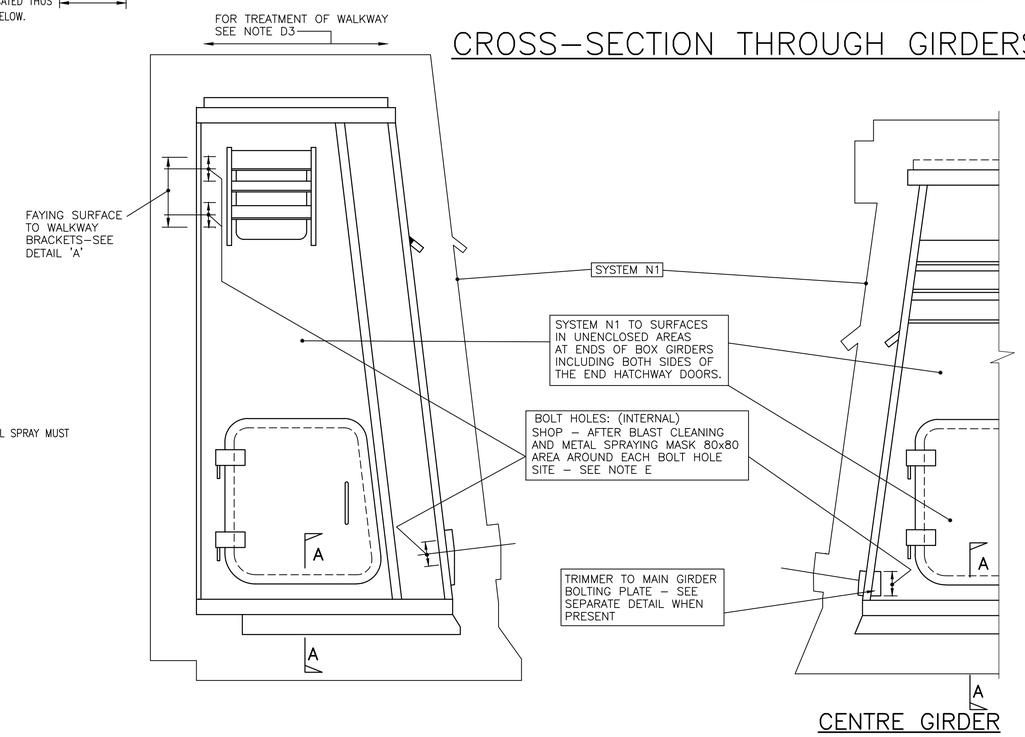

OUTER GIRDER

CENTRE GIRDER

ELEVATION OF GIRDER ENDS.

Rev	Date	Description of revision	Design'd	C'kd
B	Dec 10	EUROCODE ISSUE	CH	MM
A	Dec 09	ORIGINAL ISSUE	CH	MM

Network Rail

Network Rail Infrastructure Ltd
Registered Office:
Kings Place
90 York Way
London
N1 9AG

Approved	P Clark	Senior Programme Engineering Manager (Building & Civils)	P.C.	Dec-10
	Name	Position	Signature	Date

Master copy with original signatures held by Network Rail HQ CIVIL ENGINEERING STANDARD DESIGN

© COPYRIGHT NETWORK RAIL 2009

STANDARD HALF THROUGH UNDERBRIDGES BOX GIRDERS & TRANSVERSE RIBBED FLOORS

CORROSION PROTECTION

MAIN GIRDERS & GENERAL NOTES

Scale	INDICATIVE	
Drawing Number	NR/CIV/SD/1130	B

Full document details: NR NR-CIV-SD-1130 ISSUE B 2010
Documents
Document Sharing Hub
Copyright Network Rail
Provided by NR under licence with Network Rail
Reproduced by permission of Ordnance Survey on behalf of HMSO. © Crown copyright and database rights 2010. Licence number 100037930