Supplementary Information

The following information is associated with Network Rail Standard:
NR CIV/SD/1133 Rev B

Additional Content Access

Click the link below to access CAD version of this drawing.

CAD Drawing

- CIV/SD/1133

If you have any questions, or need assistance, please contact **IHS Support**

Information accessed via the links above is the property of the Copyright holder

IHS Additional Content Page

Documents
Document Sharing Hub

Copyright Network Rail
Provided by IHS under license with Network Rail
No reproduction or networking permitted without license from IHS
Full document details: NR NR-CIV-SD-1133 ISSUE B 2010

Licensee=Weston Williamson/5989497001, User=sam, albett
Not for Resale, 03/27/2016 21:02:30 MDT

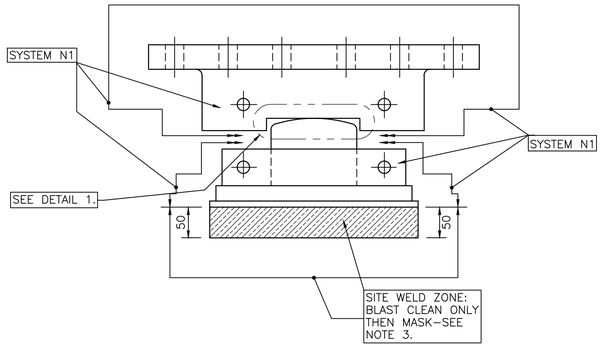

FIXED END

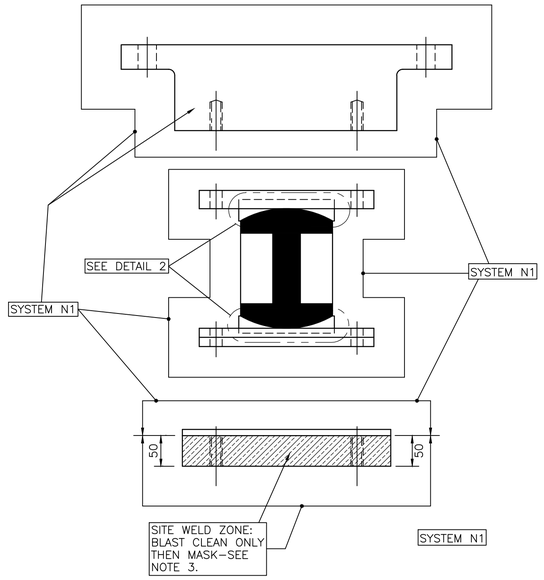

FREE END

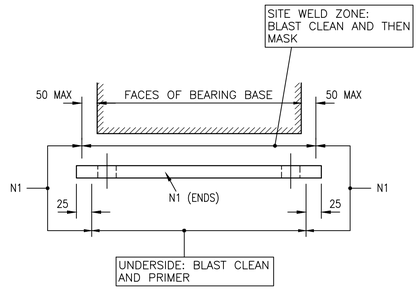

SIDE ELEVATION OF BASEPLATE.

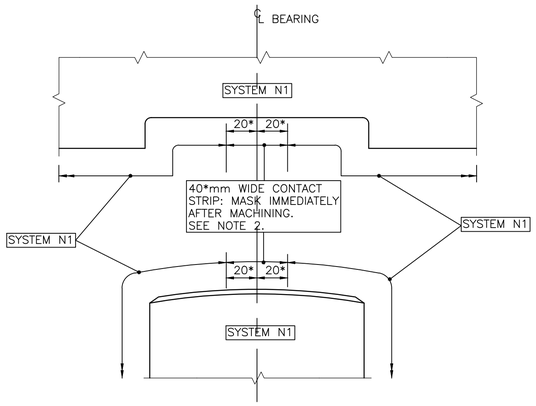

DETAIL 1 (EXPLODED).

* DIMENSIONS TO BE CONFIRMED BY DESIGNER DEPENDANT UPON SPECIFIC MOVEMENTS AND ROTATIONS REQUIRED ON THE PARTICULAR BRIDGE.

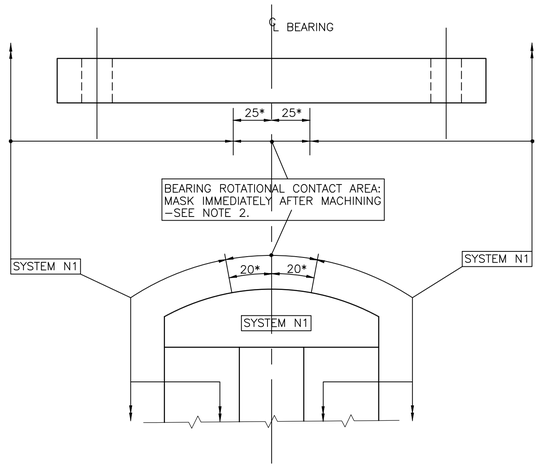

DETAIL 2 (EXPLODED)

* DIMENSIONS TO BE CONFIRMED BY DESIGNER DEPENDANT UPON SPECIFIC MOVEMENTS AND ROTATIONS REQUIRED ON THE PARTICULAR BRIDGE.

1. FOR GENERAL PAINTING NOTES SEE DRAWING NR/CIV/SD/1130.
2. AFTER COMPLETION OF SHOP PAINTING AND IMMEDIATELY PRIOR TO ASSEMBLY, REMOVE MASKING TAPE AND CLEAN OFF BEARING ROTATIONAL CONTACT AREA, THEN APPLY TWO COATS OF A MINERAL OIL–BASED ANTI–CORROSIVE TO EXPOSED AREAS AND ASSEMBLE.
3. MASKING STRIP TO BE REMOVED ON SITE AND SURFACE CLEANED PRIOR TO WELDING. AFTER COMPLETION OF SITE WELDING, CLEAN UP AND APPLY FULL PAINT SYSTEM TO EXPOSED AREAS IN ACCORDANCE WITH THE SPECIFICATION.

Rev	Date	Description of revision	Design'd	C'kd
B	Dec 10	EUROCODE ISSUE	CH	MM
A	Dec 09	ORIGINAL ISSUE	CH	MM

Network Rail

Network Rail Infrastructure Ltd
Registered Office:
Kings Place
90 York Way
London
N1 9AG

	Name	Position	Signature	Date
Approved	P Clark	Senior Programme Engineering Manager (Building & Civils)	P.C.	Dec–10

Master copy with original signatures held by Network Rail HQ
CIVIL ENGINEERING STANDARD DESIGN

© COPYRIGHT NETWORK RAIL 2009

STANDARD HALF THROUGH UNDERBRIDGES
BOX GIRDERS & TRANSVERSE RIBBED FLOORS

CORROSION PROTECTION

BEARINGS

Scale	INDICATIVE	
Drawing Number	NR/CIV/SD/1133	B

Full document details: NR NR-CIV-SD-1133 ISSUE B 2010
Licensed Hitachi Willowood 2008/4/2001. User-sam, sfirst
Copyright Network Rail
Provided by IHS under licence with Network Rail
No reproduction or networking permitted without licence from IHS
AVA Documents Document Sharing Hub