Supplementary Information

The following information is associated with Network Rail Standard:
NR CIV/SD/1151 Rev B

Additional Content Access

Click the link below to access CAD version of this drawing.

CAD Drawing

- CIV/SD/1151

If you have any questions, or need assistance, please contact **IHS Support**

Information accessed via the links above is the property of the Copyright holder

IHS Additional Content Page

Documents
Document Sharing Hub

Copyright Network Rail
Provided by IHS under license with Network Rail
No reproduction or networking permitted without license from IHS
Full document details: NR NR-CIV-SD-1151 ISSUE B 2010

Licensee=Weston Williamson/5989497001, User=sam, albett
Not for Resale, 03/27/2016 21:02:19 MDT

Full document details: NR NR-CIV-SD-1151ISSUE B 2010

DRAWING No. NR/CIV/SD/1151

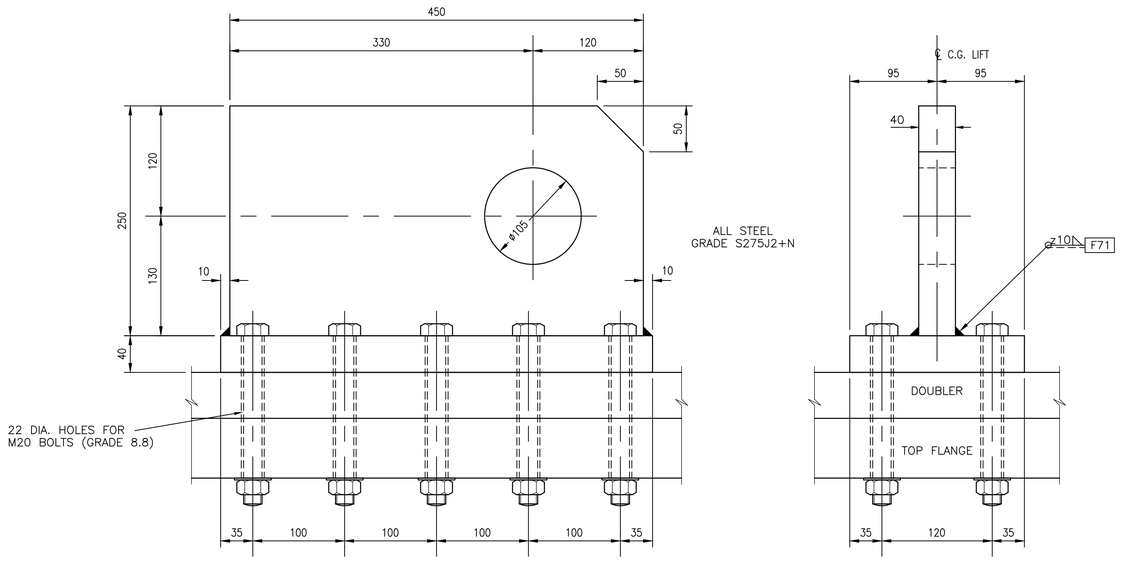

LIFTING CLEAT TYPE 'B' – S.W.L. 25 T

FOR GIRDERS UP TO 50 T MAX. WEIGHT

MINIMUM CLEAT CENTRES (m) – SEE NOTE 1			
SPAN (m)	DOUBLE TRACK 2 GIRDER	SINGLE TRACK 2 GIRDER OR DOUBLE TRACK 3 GIRDER OUTER GIRDER	DOUBLE TRACK 3 GIRDER CENTRE GIRDER
21	5.5	5.9	7.5
24	6.4	6.7	7.6
27	7.2	7.5	9.0
30	8.7		
33	9.6		
36	10.4		
39	10.9		

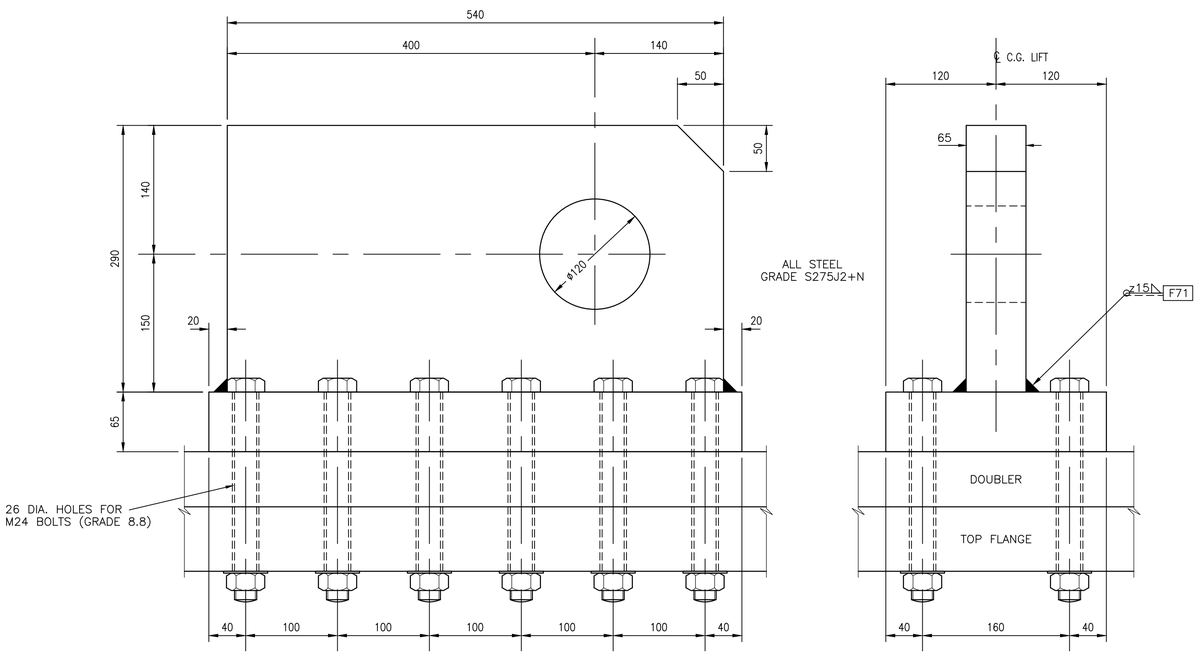

LIFTING CLEAT TYPE 'C' – S.W.L. 50 T

FOR GIRDERS UP TO 100 T MAX. WEIGHT

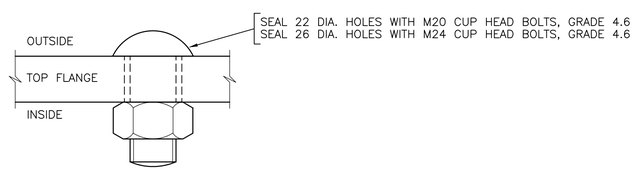

SEALING OF LIFT CLEAT HOLES AFTER USE

DETAIL '1'

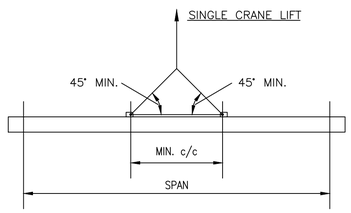

LIFT CLEATS TYPE 'B' OR 'C'

1. LIFTING CLEATS DO NOT NEED TO BE ADJACENT TO A DIAPHRAGM. POSITION TO BE CHECKED TO AVOID FOULING.
2. LIFTING CLEATS TO BE LOCATED ON THE TRANSVERSE CENTRE OF GRAVITY OF THE LIFT, DEPENDING WHETHER PARAPETS ETC. ARE TO BE ATTACHED.
3. AFTER USE THE HOLES ARE TO BE SEALED USING CUP HEAD BOLTS. SEE DETAIL 1.
4. LIFTING CLEATS HAVE BEEN DESIGNED FOR VERTICAL LIFTING ONLY. THEY MUST NOT BE USED FOR TURNING THE GIRDERS OVER.
5. FOR LIFTING CLEATS USING 2 CRANES SEE DRG. NR/CIV/SD/1150
6. IT MUST BE ENSURED THAT THE LIFTING SHACKLES TO BE USED WILL FIT THE LIFTING CLEATS.
7. INSIDE OF LIFTING HOLE TO BE SMOOTH & FREE OF SHARP EDGES & NICKS.
8. ALL BOLTS TO BE CHECKED AS SPANNER TIGHT BEFORE LIFTING.
9. LIFTING CLEATS SHALL BE UNEQUELY MARKED, TESTED & CERTIFIED.

Rev	Date	Description of revision	Design'd	C'kd
B	Dec 10	EUROCODE ISSUE	CH	MM
A	Dec 09	ORIGINAL ISSUE	CH	MM

Network Rail

Network Rail Infrastructure Ltd
Registered Office:
Kings Place
90 York Way
London
N1 9AG

	Name	Position	Signature	Date
Approved	P Clark	Senior Programme Engineering Manager (Building & Civils)	P.C.	Dec–10

Master copy with original signatures held by Network Rail HQ
CIVIL ENGINEERING STANDARD DESIGN

© COPYRIGHT NETWORK RAIL 2009

STANDARD HALF THROUGH UNDERBRIDGES BOX GIRDERS & TRANSVERSE RIBBED FLOORS

LIFTING CLEATS FOR MAIN GIRDERS USING SINGLE CRANE

Scale	1:3.3	
Drawing Number	NR/CIV/SD/1151	B

Documents Document Standard Hub
Licensee:Atkinson Williamson(0008842002) User:sam. elliott
Date & Time Printed:Wed 24 Nov 2010 11:17:11
Copyright Network Rail
Provided by NRI under licence with Network Rail
Reproduced by permission of Network Rail. Licence from NRI.