Supplementary Information

The following information is associated with Network Rail Standard:
NR CIV/SD/120 Rev A

Additional Content Access

Click the link below to access CAD version of this drawing.

CAD Drawing

- CIV/SD/120

If you have any questions, or need assistance, please contact **IHS Support**

Information accessed via the links above is the property of the Copyright holder

IHS Additional Content Page

Documents
Document Sharing Hub

Copyright Network Rail
Provided by IHS under license with Network Rail
No reproduction or networking permitted without license from IHS
Full document details: NR NR-CIV-SD-120 ISSUE A 2008

Licensee=Weston Williamson/5989497001, User=sam, albett
Not for Resale, 03/27/2016 23:57:05 MDT

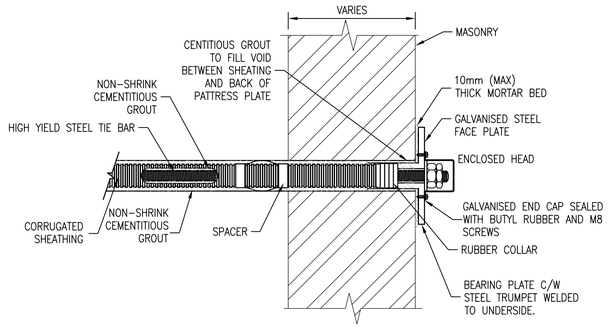

GALVANISED STEEL PATTRESS PLATE WITH DOUBLE PROTECTED TIE BAR

SCALE 1:10

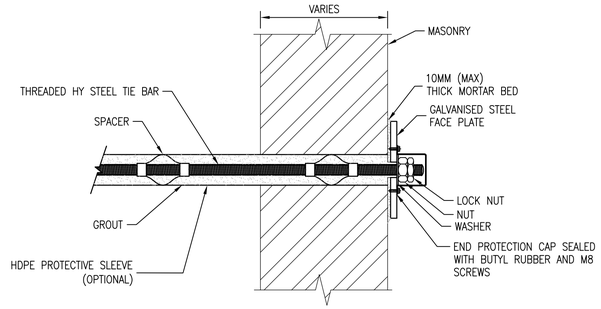

GALVANISED STEEL PATTRESS PLATE WITH GALVANISED STEEL TIE BAR

SCALE 1:10

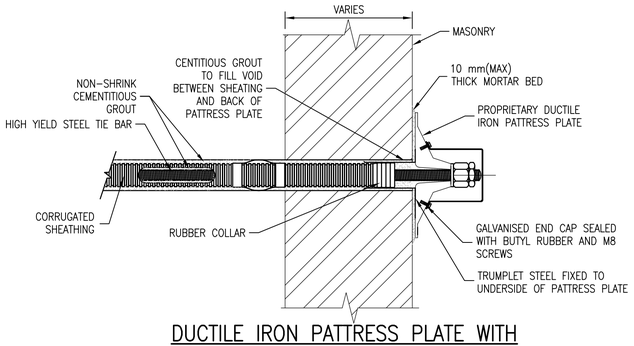

DUCTILE IRON PATTRESS PLATE WITH DOUBLE PROTECTED TIE BAR

SCALE 1:10

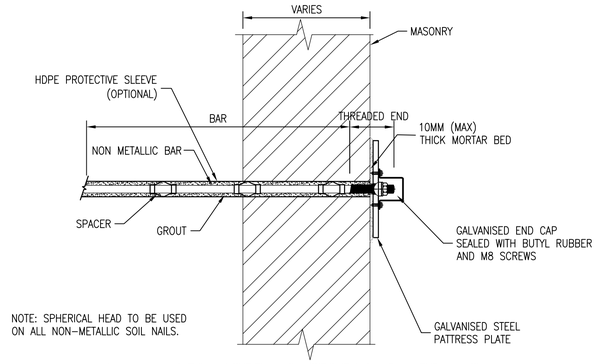

NOTE: SPHERICAL HEAD TO BE USED ON ALL NON-METALLIC SOIL NAILS.

GALVANISED STEEL PATTRESS PLATE WITH NON-METALLIC TIE BAR

SCALE 1:10

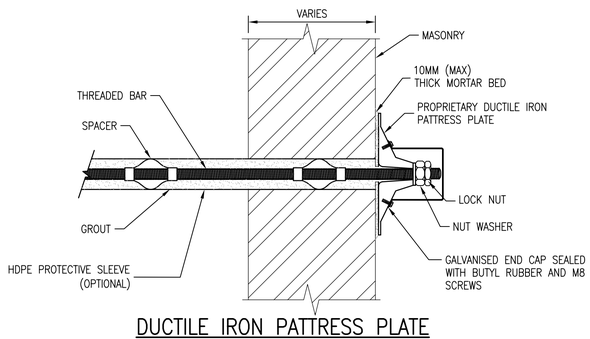

DUCTILE IRON PATTRESS PLATE GALVANISED STEEL TIE BAR

SCALE 1:10

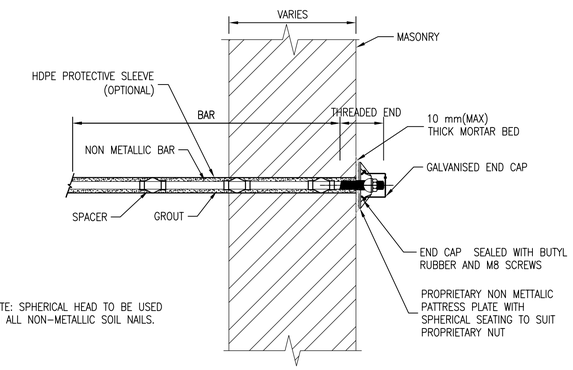

NOTE: SPHERICAL HEAD TO BE USED ON ALL NON-METALLIC SOIL NAILS.

NON-METALLIC PATTRESS PLATE AND TIE BAR

SCALE 1:10

C5 WHEN CONFIGURING PATTRESS PLATE/TIE BAR LOCATIONS
SCHEME DESIGNERS SHALL GIVE APPROPRIATE CONSIDERATION TO:

- INTERFACES BETWEEN PATTRESS PLATES AND ARCH RINGS, SPANDRELS AND STRINGER COURSES.
- DRIFT EFFECTS DURING DRILLING OPERATIONS FOR TIE BAR INSTALLATION.

C6 SCHEME DESIGNERS MAY INTRODUCE RIBS TO NON PROPRIETARY PATTRESS PLATES FOR IMPROVED LOAD CAPACITY. WHERE PROPOSED, SCHEME DESIGNERS SHALL DETAIL THE PROPOSED APPROACH FOR THEIR DESIGN IN A PROJECT SPECIFIC FORM A/B SUBMISSION.

D INSTALLATION GUIDANCE

REFER TO DRAWING NR/CIV/SD/121

E RISK ASSESSMENT

E1 REFER TO TABLE 1.

B5 PROPRIETARY TIE BARS AND ASSOCIATED FITTING SHALL HAVE A BRITISH BOARD OF AGRÉMENT ROAD AND BRIDGES APPROVAL CERTIFICATE OR EUROPEAN EQUIVALENT REGISTERED WITH THE DEPARTMENT OF TRANSPORT.

PATTRESS PLATES AND FITTINGS

B6 REFER TO DRAWING NR/CIV/SD/121 FOR PATTRESS PLATE SPECIFICATION DETAILS.

GROUTS

B7 NON SHRINK CEMENTITIOUS GROUTS SHALL HAVE A MINIMUM f_{cu}=40N/mm^2 (28 DAYS). WATER/CEMENT RATIO SHALL NOT EXCEED 0.45. GROUT CUBE SAMPLES (3NO) ARE TO BE TAKEN AND TESTED FOR EVERY TIE BAR.

C DESIGN ASSUMPTIONS

C1 THE DESIGNER OF THE SCHEME SHALL BE RESPONSIBLE FOR SIZING ALL COMPONENTS OF THE TIE BAR AND PATTRESS PLATE. CONSIDERATION SHALL BE GIVEN TO THE FOLLOWING:

- TIE BAR STRENGTH (TAKING ACCOUNT OF SACRIFICIAL LOSS)
- PATTRESS PLATE SIZE PATTRESS PLATE THICKNESS
- SUBSTRATE CAPACITY TO RESIST APPLIED STRESSES
- NOMINAL LOAD REQUIRED IN TIE BAR
- SKEW BRIDGE EFFECTS

C2 THE DESIGNER SHALL COMPLETE MATERIAL TESTING TO CONFIRM THE SUBSTRATE PROPERTIES AGAINST WHICH THE PATTRESS PLATE IS TO BE FIXED. THESE SHALL BE INCLUDED IN THE FORM A/B SUBMISSION.

C3 THE DESIGNER SHALL GIVE APPROPRIATE CONSIDERATION TO STRAY CURRENT PROTECTION AND BONDING OF TIE BARS AND PATTRESS PLATES WHERE APPROPRIATE IN ACCORDANCE WITH THE GUIDANCE GIVEN IN RAILWAY GROUP STANDARD GC/RC5510.

C4 SCHEME DESIGNER MAY CONSIDER USING WALING PLATES TO PROVIDE IMPROVED BEARING BEHIND PATTRESS PLATE. DETAILS TO BE PROVIDED WITHIN A PROJECT SPECIFIC FORM A/B SUBMISSION.

TABLE 1

SAFETY, HEALTH & ENVIRONMENT RISK ASSESSMENT

DESIGNERS' NOTE – CDM REG. 13(2)(b)

THE FOLLOWING ARE SIGNIFICANT HAZARDS WHICH MIGHT AFFECT THE HEALTH AND SAFETY OF THOSE UNDERTAKING THE WORKS OUTLINED IN THIS SET OF DRAWINGS ON RAILWAY STRUCTURES OR THOSE AFFECTED BY THESE ACTIVITIES. A SITE SPECIFIC RISK ASSESSMENT SHOULD ALWAYS BE UNDERTAKEN PRIOR TO COMMENCING ANY OF THE WORKS DESCRIBED ON SITE.

IT IS ASSUMED THAT A COMPETENT CONTRACTOR IS AWARE OF THE RISKS ASSOCIATED WITH GENERAL CONSTRUCTION ACTIVITIES UNDERTAKEN WITHIN THE RAILWAY ENVIRONMENT.

RISK	STAGE	MITIGATING MEASURES
BURIED AND WALL MOUNTED SERVICES.	D/C	ENSURE ALL CABLES/SERVICES ARE IDENTIFIED AND PROTECTED BY CONTRACTOR PRIOR TO COMMENCEMENT OF WORK. (SEE NOTE A5)
HOLE COLLAPSE	C	WHEN DRILLING THROUGH RETAINED FILL BEHIND WALL, PIPE SLEEVES SHALL BE DRIVEN IMMEDIATELY BEHIND THE DRILL HEAD TO PREVENT HOLE COLLAPSE.
WORKING NEAR THE RUNNING LINE.	D/C	ALL WORKS TO BE UNDERTAKEN IN ACCORDANCE WITH NETWORK RAIL STANDARDS/RULE BOOK USING RIMINI PLANNING.
WORKING NEAR ROAD TRAFFIC	C	CONTRACTOR TO PROVIDE SAFE METHOD OF WORKING WITH APPROPRIATE TRAFFIC MANAGEMENT PROVISION WHERE REQUIRED.
FALLING AND/OR ITEMS FALLING FROM HEIGHT	C	CONTRACTOR TO PROVIDE SAFE METHOD OF WORKING WITH APPROPRIATE CONSIDERATION GIVEN TO EDGE PROTECTION, HANDRAILS, TOE BOARDS/CATCH NETTING AS APPROPRIATE. USE IRATA QUALIFIED STAFF FOR ROPED ACCESS WORK WHERE REQUIRED.
UNAUTHORISED ALTERATION/ DAMAGE TO LISTED STRUCTURES	D/C	DESIGNER'S SHALL CHECK THE STATUS OF THE STRUCTURE. WORKS PROPOSED FOR LISTED STRUCTURES SHALL BE AGREED IN CONSULTATION WITH THE RELEVANT STATUTORY AUTHORITY.
CONTACT WITH OHLE	D/C	ENSURE CORRECT PROCEDURE FOR ISOLATIONS IS FOLLOWED. CONSIDER USE OF SHORT TIE BAR LENGTHS IN CONJUNCTION WITH COUPLERS AND OR NON METTALIC TIE BARS.
EXCESSIVE TIE BAR DEFLECTION PENETRATING TRACK FORMATION.	D/C	CONTRACTOR TO MONITOR FORMATION DURING TIE BAR INSTALLATION.
ADVERSE EFFECTS ON TRACK QUALITY DURING TIE BAR INSTALLATION.	D/C	TRACK TO BE MONITORED IN ACCORDANCE WITH NETWORK RAIL LETTER OF INSTRUCTION NR/BS/LI/045.
STRAY CURRENT CORROSION IN DC ELECTRIFIED AREAS	D/C	LIMITING MEASURES TO BE CONSIDERED BY DESIGNER'S INCLUDE ELECTRICAL BONDING OF BURIED TENDONS, USE OF NON METALLIC TIES, INCREASED SACRIFICIAL STEEL THICKNESS. (SEE NOTE C3)
MANUAL HANDLING	D/C	DESIGNERS/CONTRACTORS TO CONSIDER WEIGHTS OF SPECIFIED COMPONENTS. LIFTING ARRANGEMENTS FOR COMPONENTS HEAVIER THAN 25KG TO BE ADDRESSED IN WORKS METHOD STATEMENT.
COMPONENT FAILURE DURING MAINTENANCE/DECOMMISSIONING	D/C	CONTRACTORS SHALL ENSURE ADEQUATE TIE BAR LENGTH IS LEFT EXPOSED TO ENABLE TIE BAR STRESSES TO BE INCREASED/DECREASED AND/OR PATTRESS PLATES REMOVED SAFELY.
ENVIRONMENTAL CONSTRAINTS I.E. S.S.S.I'S, PROTECTED SPECIES, FLOOD RISKS	D/C	WHERE SPECIFIC ENVIRONMENTAL RISKS ARE IDENTIFIED CONSULTATION WITH THE RELEVANT STATUTORY AUTHORITIES WILL BE SOUGHT PRIOR TO CONSTRUCTION OF THE WORKS TO OBTAIN WRITTEN CONSENTS.

NOTE : C=CONSTRUCTION, D=DESIGN, O=OPERATION

DRAWING No. NR/CIV/SD/120

NOTES

A GENERAL NOTES

A1 ALL DIMENSIONS ARE IN MILLIMETRES UNLESS OTHERWISE STATED.

A2 THIS IS A GENERIC DRAWING AND IS IN ACCORDANCE WITH THE STANDARDS APPLICABLE AT THE TIME OF THE DRAWING'S DATE OF APPROVAL. THE DESIGNER SHALL ENSURE THAT ANY SUBSEQUENT CHANGES TO THESE STANDARDS ARE INCORPORATED IN THE PERMANENT WORKS.

A3 THE DETAILS SHOWN ON THIS DRAWING SHOW OPTIONS FOR THE PROVISION OF TIE BARS AND PATTRESS PLATE REPAIRS. SCHEME DESIGNERS SHALL CONSIDER THE MOST APPROPRIATE OPTION FOR A PARTICULAR APPLICATION.

A4 ALL WORKS SHALL BE IN ACCORDANCE WITH NETWORK RAIL COMPANY STANDARD NR/GN/CIV/008. MODEL CLAUSES FOR SPECIFYING CIVIL ENGINEERING WORKS (THE SPECIFICATION).

A5 SERVICES:–

1. ALL WORKS SHALL BE COMPLETED IN ACCORDANCE WITH NETWORK RAIL COMPANY STANDARDS/PROCEDURES: –
   - NR/SP/BUS/011 PREVENTION OF DAMAGE TO AND DANGER FROM SURFACE AND BURIED SERVICES.
   - NR/PRC/MPI/CP0024 CONTROL AND USE OF METAL PINS ON NETWORK RAILINFRASTRUCTURE.
   - NR/PRC/MPI/CP0026 PROCESS FOR LOCATING AND BURIED SERVICES PRIOR TO GROUND INVESTIGATION.
2. THE CONTRACTOR IS RESPONSIBLE FOR LOCATING, EXPOSING AND PROTECTING SERVICES AFFECTED BY THE WORKS.

A6 PROTECTIVE TREATMENTS TO COMPONENTS SHALL BE IN ACCORDANCE WITH NETWORK RAIL COMPANY STANDARDS NR/SP/CIV/002 AND NR/SP/CIV/039 (RT98).

B SPECIFICATION

B1 THE DESIGNER SHALL PREPARE A SPECIFICATION FOR THE WORKS TO DEFINE THE PARTICULAR REQUIREMENTS FOR THE PROJECT.

TIE BARS

B2 TIE BARS SHALL BE ONE OF THE FOLLOWING TYPES:

1. HIGH YIELD THREADED BAR SHALL COMPLY WITH BS4449:2005 OR EQUIVALENT EUROPEAN STANDARD,
2. MIN 25MM DIA. WITH DOUBLE CORRSION PROTECTION IN ACCORDANCE WITH BS 8081 OVER THE FULL BAR LENGTH AND THOSE AREAS IMMEDIATLEY BEHIND THE PATTRESS PLATE.
3. HIGH YIELD THREADED BAR SHALL COMPLY WITH BS4449:2005 OR EQUIVALENT EUROPEAN STANDARD, MIN 38MM DIA TO INCLUDE 6MM ADDITIONAL SACRIFICIAL THICKNESS PROPRIETARY NON-METALLIC BAR, MIN 25MM DIA. THREADED AS REQUIRED.

B3 WHERE PROVIDED, THREADS SHALL NOT REDUCE THE DESIGN STRENGTH OF THE BAR.

B4 ALL NUTS, PLATES, COUPLERS ETC SHALL BE FULLY COMPATIBLE WITH THE TIE BAR IN TERMS OF GEOMETRIC CONFIGURATION AND STRENGTH.

Rev	Date	Description of revision	Design'd	C'kd
A	31.03.08	FIRST ISSUE	GPR	NGAY
P2	18.03.08	FORM B	GPR	NGAY
P1	08.09.06	FORM A	GPR	RAS

Network Rail
40 Melton Street
London NW1 2EE
Tel: 020-7557-8000

	Name	Position	Signature	Date
Approved	P. CLARK	Senior Prog. Eng. Manager Infrastructure Inv. Construction	PC	01.04.08

Master copy with original signatures held by Network Rail HQ
CIVIL ENGINEERING STANDARD DESIGN

© COPYRIGHT NETWORK RAIL 2008

BRICK AND MASONRY REPAIR STANDARD DRAWINGS

TIE BAR/PATTRESS PLATE ASSEMBLY OPTIONS

Scale	AS SHOWN
Drawing Number	NR/CIV/SD/120 A

Full document details: NR NR-CIV-SD-120 ISSUE A 2008
Documents Document Standard Hub
Copyright Network Rail
Provided by IHS under licence with Network Rail
Reproduced by permission of Network Rail. No other use permitted without prior written consent from IHS.
Licensee=Mott MacDonald Group Limited, User=sam, allan
No reproduction or networking permitted unless authorised by licence, see www.ihs.com/terms