Supplementary Information

The following information is associated with Network Rail Standard:
**NR CIV/SD/121** Rev A

## Additional Content Access

Click the link below to access CAD version of this drawing.

### CAD Drawing

- CIV/SD/121

If you have any questions, or need assistance, please contact **IHS Support**

Information accessed via the links above is the property of the Copyright holder

**IHS Additional Content Page**

Documents
Document Sharing Hub

--`,,,`,,`,,`,`,,`,,,,,,```-`-`,,`,,`,`,,`---

Copyright Network Rail
Provided by IHS under license with Network Rail
No reproduction or networking permitted without license from IHS
Licensee=Weston Williamson/5989497001, User=sam, albett
Not for Resale, 03/27/2016 23:57:10 MDT

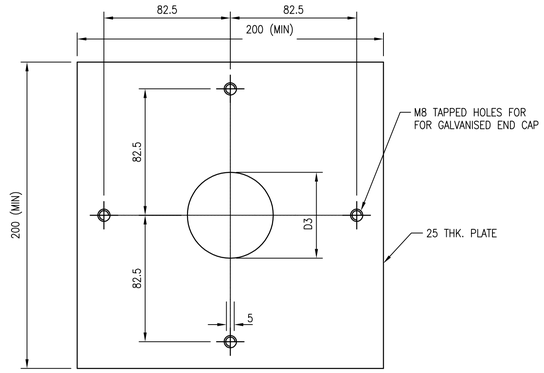


DIAMETER "D3" TO SUIT NAIL
DEBONDING SLEEVE AND GASKET
D3=BAR DIAMETER+6mm

## GALVANISED STEEL PATTRESS PLATE

SCALE 1:5

NOTE: DIMENSIONS MAY BE ALTERED
TO SUIT PARTICULAR DESIGN

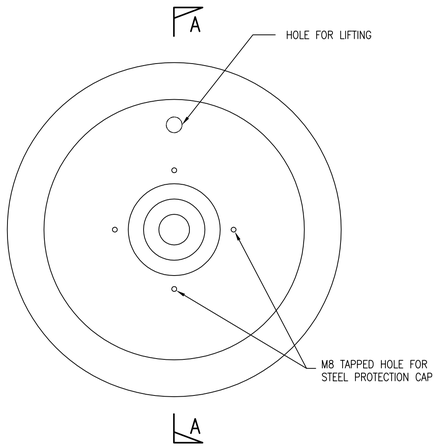


## PROPRIETARY DUCTILE IRON PATTRESS PLATE

SCALE 1:5

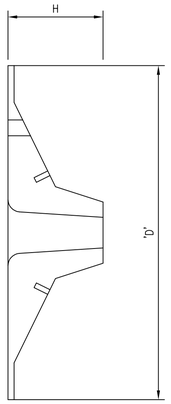


## SECTION A–A

SCALE 1:5

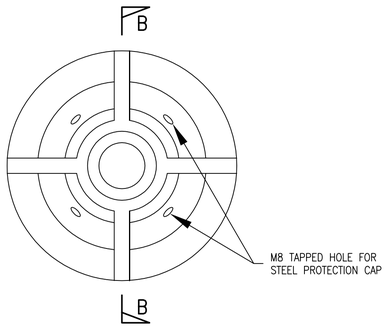


## PROPRIETARY NON METALLIC PATTRESS PLATE

SCALE 1:2

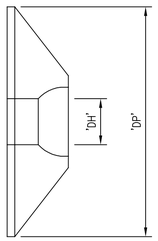


## SECTION B–B

SCALE 1:2

TABLE 1

| NOMINAL BAR SIZE IN (mm) | MAXIMUM DESIGN LOAD (KN) | NOMINAL DIMENSIONS | |
|---|---|---|---|
| | | D (mm) | H (mm) |
| 24 | 176 | 335 | 72 |
| 30 | 280 | 420 | 90 |
| 39 | 490 | 545 | 120 |

TABLE 2

| DH (mm) | DP (mm) | LOAD CAPACITY (KN) |
|---|---|---|
| 25 | 150 | 70.0 |
| 30 | 150 | 70.0 |
| 35 | 130 | 71.5 |

B6 UNLESS OTHERWISE REQUIRED BY THE DESIGN FOR AESTHETIC OR OTHER PURPOSES, NON–METALLIC PATTRESS PLATES SHALL BE BLACK IN COLOUR TO PROVIDE ADDITIONAL PROTECTION AGAINST UV DEGRADATION.

C DESIGN ASSUMPTIONS

REFER TO DRAWING NR/CIV/SD/120

D INSTALLATION GUIDANCE

D1 AIR, AIR MIST, WATER AND FOAM FLUSHES MAY BE CONSIDERED BY THE DESIGNER FOR THE INSTALLATION OF TIE BARS. THE PROPOSED FLUSH SHALL BE SPECIFIED IN THE PROJECT SPECIFIC FORM A/B SUBMISSION FOR NETWORK RAIL ACCEPTANCE

D2 THE CONTRACTOR SHALL DERIVE A SAFE METHOD FOR CONSTRUCTION FOR EACH SITE BASED ON THE FOLLOWING METHODOLOGY: –

- ERECT ANY TEMPORARY WORKS REQUIRED TO ACCESS TIE BAR LOCATION.
- CLEAR VEGETATION AND THOROUGHLY CLEAN AREAS OF BRICKWORK/MASONRY AROUND TIE BAR LOCATIONS.
- AT EACH LOCATION DIAMOND CORE THROUGH BRICKWORK/MASONRY THICKNESS AT POINT OF ENTRY.
- DRILL THROUGH RETAINED FILL BEHIND WALL, PUSHING PIPE SLEEVE IMMEDIATELY BEHIND THE DRILL HEAD TO PREVENT HOLE COLLAPSE.
- DIAMOND CORE THROUGH BRICKWORK/MASONRY THICKNESS AT POINT OF EXIT.
- INSTALL TIE BAR THROUGH SLEEVE.
- REMOVE PIPE SLEEVE OR SURROUND TIE BAR WITH GROUT.
- INSTALL PATTRESS PLATED ON MORTAR BEDDING AND HAND TIGHTEN BOLTS UNTIL MORTAR HAS CURED.
- TIGHTEN BOLTS TO DESIGN LOAD DEFINED BY THE SCHEME DESIGNER.
- REMOVE TEMPORARY WORKS AND MAKE GOOD SITE.

D3 PROPRIETARY TIE BARS SHALL BE INSTALLED IN ACCORDANCE WITH THE MANUFACTURERS INSTRUCTIONS AND GUIDELINES.

D4 PROPRIETARY TIE BARS SHALL BE TIGHTENED IN ACCORDANCE WITH THE MANUFACTURER'S GUIDANCE.

D5 STRUCTURE AREAS TO BE COVERED BY PATTRESS PLATES SHALL BE CLEARED OF ALL VEGETATION AND MOSS AND THOROUGHLY CLEANED. ANY SPALLING MASONRY SHALL BE REMOVED TO EXPOSE A SOUND SURFACE. LOCAL STITCHING SHALL BE CARRIED OUT IF NECESSARY TO ENABLE ADEQUATE LOAD TRANSFERS INTO THE SURROUNDING BRICKWORK OR MASONRY.

D6 THE PATTRESS PLATE ASSEMBLY SHALL BE BEDDED ON MORTAR (MAX. 10MM THICKNESS) AND THE NUT HAND TIGHTENED. ONCE THE MORTAR IS SET THE TIE BAR NUTS SHALL BE TIGHTENED TO PROVIDE THE NOMINAL LOA REQUIRED BY THE DESIGN. PATTRESS PLATE SHOULD BE INSTALL IN ACCORDANCE WITH THE MANFACTURERS INSTRUCTIONS.

D7 TIE BARS SHALL BE TRIMMED AND ALL SHARP EDGES GROUND TO A RADIUS

D8 EXPOSED TIE BARS, NUTS, WASHERS AND PATTRESS PLATES SHALL RECEIVE PROTECTIVE COATING N1 IN ACCORDANCE WITH NR/SP/CIV/039 SPECIFICATION RT98 – PROTECTIVE TREATMENTS FOR RAILTRACK INFRASTRUCTURE.

D9 CORING FOR INSTALLATION OF TIE BARS SHALL NOT DEVIATE FROM THE INTENDED POSITION BY MORE THAN 75MM OVER THE TOTAL LENGTH OF HOLE DRILLED.

D10 WHERE MASONRY REPAIRS ARE REQUIRED THEY SHALL BE COMPLETED IN ACCORDANCE WITH NETWORK RAILS STANDARD MASONRY REPAIR DRAWINGS NR/CIV/SD/100–116.

D11 A MINIMUM 900MM CLEARANCE DIMENSION FROM UNDERSIDE OF SLEEPER TO THE NEAREST POINT OF TIE BAR CONSTRUCTION SHALL BE MAINTAINED.

D12 CONTRACTORS SHALL PROVIDE APPROPRIATE MEASURES FOR THE MANAGEMENT OF WATER DURING DRILLING OPERATIONS. PARTICULAR CARE IS REQUIRED WHEN WORKING IN CLOSE PROXIMITY TO TENANTED ARCHES AND EXISTING ELECTRICAL SYSTEMS I.E. INSTALLED LIGHTING OR OLE ELECTRIFIED LINES.

E RISK ASSESSMENT

REFER TO DRAWING TABLE 1 OF NR/CIV/SD/120

DRAWING No. NR/CIV/SD/121

NOTES

A GENERAL NOTE

A1 ALL DIMENSIONS ARE IN MILLIMETRES UNLESS OTHERWISE STATED.

A2 THIS IS A GENERIC DRAWING AND IS IN ACCORDANCE WITH THE STANDARDS APPLICABLE AT THE TIME ON THE DRAWING'S DATE OF APPROVAL. THE DESIGNER IS REQUIRED TO ENSURE THAT ANY SUBSEQUENT CHANGES TO THESE STANDARDS ARE INCORPORATED IN THE PERMANENT WORKS.

A3 THE DETAILS SHOWN ON THIS DRAWING SHOW OPTIONS FOR THE PROVISION OF TIE BARS AND PATTRESS PLATE REPAIRS. SCHEME DESIGNERS SHALL CONSIDER THE MOST APPROPRIATE OPTION FOR A PARTICULAR APPLICATION.

A4 ALL WORKS SHALL BE IN ACCORDANCE WITH NETWORK RAIL COMPANY STANDARD NR/GN/CIV/008. MODEL CLAUSES FOR SPECIFYING CIVIL ENGINEERING WORKS (THE SPECIFICATION).

A5 SERVICES: –

1. ALL WORKS SHALL BE COMPLETED IN ACCORDANCE WITH NETWORK RAIL COMPANY STANDARDS/PROCEDURES: –
   - NR/SP/BUS/011 PREVENTION OF DAMAGE TO AND DANGER FROM SURFACE AND BURIED SERVICES.
   - NR/PRC/MPI/CP0024 CONTROL AND USE OF METAL PINS ON NETWORK RAIL INFRASTRUCTURE.
   - NR/PRC/MPI/CP0026 PROCESS FOR LOCATING AND BURIED SERVICES PRIOR TO GROUND INVESTIGATION.
2. THE CONTRACTOR IS RESPONSIBLE FOR LOCATING, EXCAVATING AND PROTECTING SERVICES AFFECTED BY THE WORKS.

A6 PROTECTIVE TREATMENTS TO COMPONENTS SHALL BE IN ACCORDANCE WITH NETWORK RAIL COMPANY STANDARDS NR/GN/CIV/002 AND NR/SP/CIV/039 (RT98).

B SPECIFICATION

B1 THE DESIGNER SHALL PREPARE A SPECIFICATION FOR THE WORKS TO DEFINE THE PARTICULAR REQUIREMENTS FOR THE PROJECT.

PATTRESS PLATES AND FITTINGS

B2 PATTRESS PLATE SHALL BE ONE OF THE FOLLOWING TYPES:
1. DUCTILE (SG) IRON,
2. GALVANISED STEEL
3. PROPRIETARY NON–METALLIC

B3 UNLESS OTHERWISE SPECIFIED BY THE DESIGNER THE STEEL GRADE FOR STEEL FACE PLATES AND ASSOCIATED FITTINGS SHALL BE GRADE S275J0 IN ACCORDANCE WITH BS EN 10025:2004 OPTION II.

B4 STEEL PATTRESS PLATES AND FITTINGS SHALL BE HOT DIP GALVANISED TO BS EN ISO 1461:1999 TO ACHIEVE A THICKNESS OF 86 MICRONS. NUTS AND WASHERS SHALL BE HOT DIP GALVANISED TO BS EN ISO 1461:1999 TO ACHIEVE A THICKNESS OF 43 MICRONS.

B5 PROPRIETARY PATTRESS PLATES AND ASSOCIATED FITTINGS SHALL HAVE A BRITISH BOARD OF AGRÉMENT ROAD AND BRIDGES APPROVAL CERTIFICATE OR EUROPEAN EQUIVALENT REGISTERED WITH THE DEPARTMENT OF TRANSPORT.

| Rev | Date | Description of revision | Design'd | C'kd |
|---|---|---|---|---|
| A | 31.03.08 | FIRST ISSUE | GPR | NGAY |
| P2 | 18.03.08 | FORM B | GPR | NGAY |
| P1 | 08.09.06 | FORM A | GPR | RAS |

Network Rail
40 Melton Street
London NW1 2EE
Tel: 020–7557–8000

| | Name | Position | Signature | Date |
|---|---|---|---|---|
| Approved | P. CLARK | Senior Prog. Eng. Manager Infrastructure Inv. Construction | PC | 01.04.08 |

Master copy with original signatures held by Network Rail HQ
CIVIL ENGINEERING STANDARD DESIGN

© COPYRIGHT NETWORK RAIL 2008

# BRICK AND MASONRY REPAIR STANDARD DRAWINGS

# PATTRESS PLATE DETAILS

| | |
|---|---|
| Scale | AS SHOWN |
| Drawing Number | NR/CIV/SD/121 A |

Full document details: NR NR-CIV-SD-121 ISSUE A 2008
Documents Document Sharing Hub
Copyright Network Rail
Provided by IHS under licence with Network Rail
Reproduced by IHS on behalf of Network Rail on 2016-01-13
Licence-Version: WWW0000595001
Licence-Type: Subscription
User-Name: allan