Supplementary Information

The following information is associated with Network Rail Standard:
NR CIV/SD/1213 Rev B

Additional Content Access

Click the link below to access CAD version of this drawing.

CAD Drawing

- CIV/SD/1213

If you have any questions, or need assistance, please contact **IHS Support**

Information accessed via the links above is the property of the Copyright holder

IHS Additional Content Page

Documents
Document Sharing Hub

Copyright Network Rail
Provided by IHS under license with Network Rail
No reproduction or networking permitted without license from IHS
Full document details: NR NR-CIV-SD-1213 ISSUE B 2010

Licensee=Weston Williamson/5989497001, User=sam, albett
Not for Resale, 03/27/2016 21:40:20 MDT

Copyright Network Rail
Provided by IHS under license with Network Rail
No reproduction or networking permitted without license from IHS
Full document details: NR NR-CIV-SD-1213 ISSUE B 2010
Licensee=Weston Williamson/5989497001, User=sam, albert
Not for Resale, 03/27/2016 21:40:20 MDT
AVA Documents
Document Sharing Hub

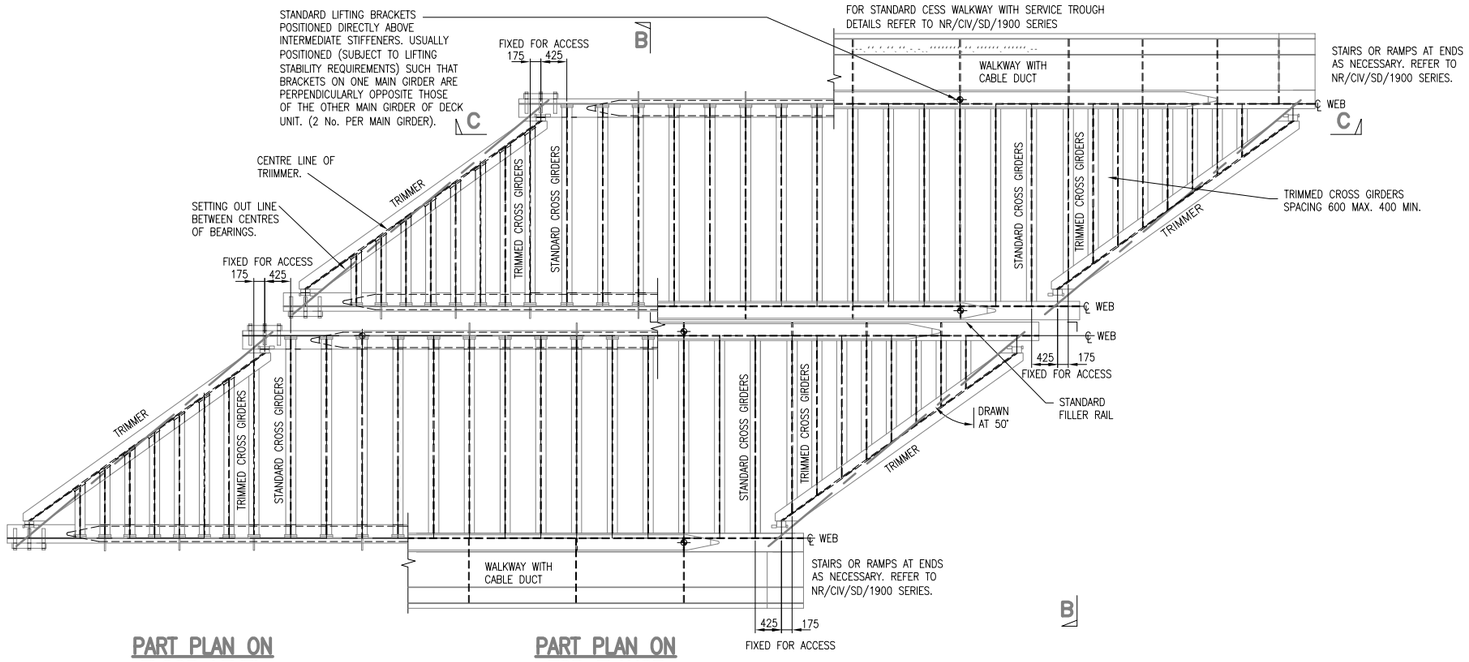

PART PLAN ON FLOOR LEVEL
SCALE 1:50

PART PLAN ON TOP FLANGE
SCALE 1:50

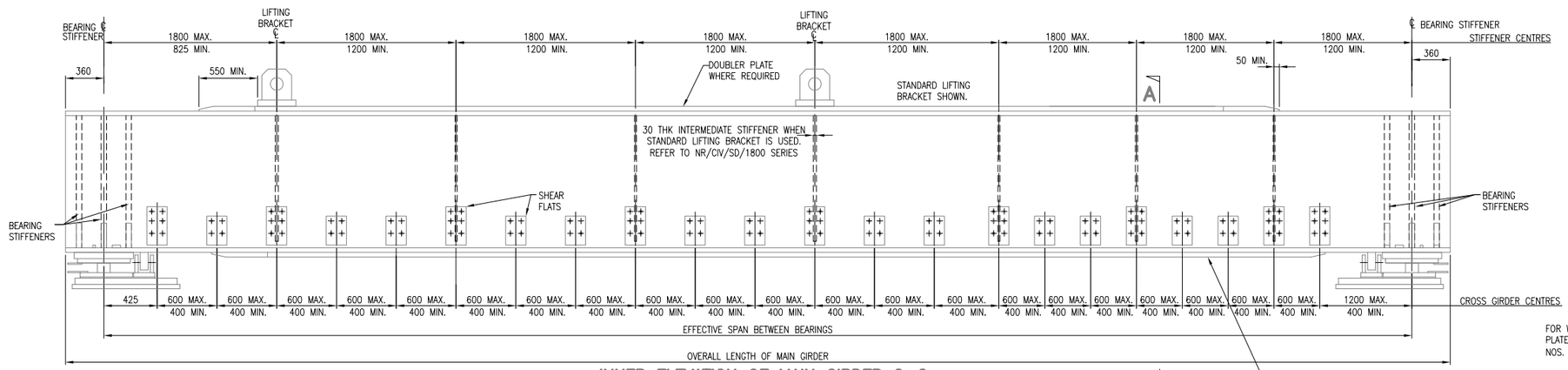

INNER ELEVATION OF MAIN GIRDER C–C
SCALE 1:25

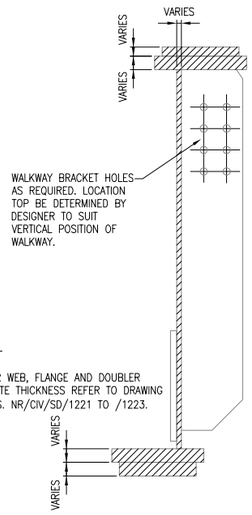

SECTION A–A.
SCALE 1:10

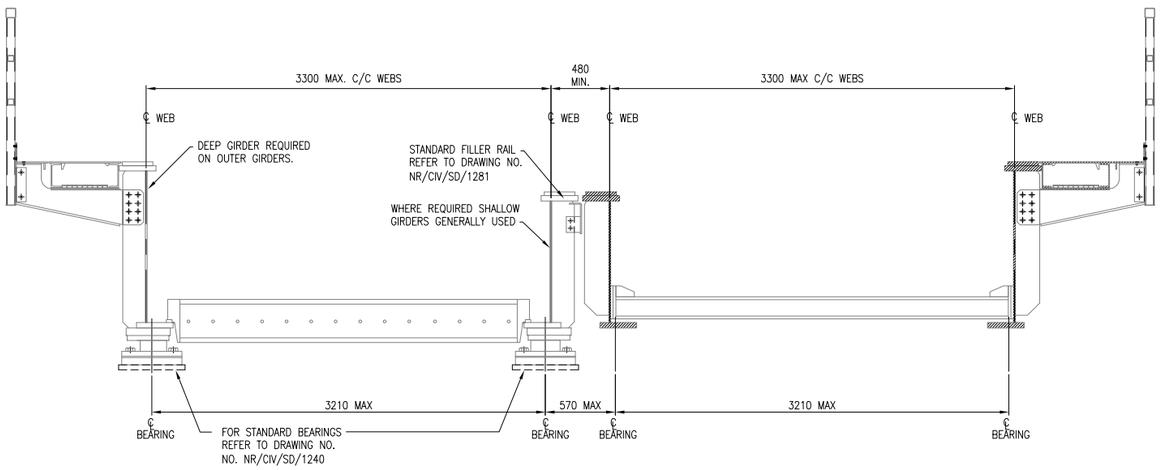

SPLIT SECTION B–B
SCALE 1:25

DRAWING No. NR/CIV/SD/1213

NOTES

1. REFER TO DRAWING NO. NR/CIV/SD/1210 FOR NOTES.
2. CROSS GIRDER SPACING DIMENSIONS GIVEN ALONG THE CENTRELINE OF THE MAIN GIRDER WEB.

Rev	Date	Description of revision	Design'd	C'kd
B	MAY 10	EUROCODE ISSUE	AGW	NY
A	APR 09	FIRST ISSUE	AGW	NY
P4	30.03.09	FINAL REVIEW FOR FORM B	DE	IP
P3	23.12.08	ISSUED FOR PUBLICATION	DE	IP
P2	31.10.08	AMENDED AS SHOWN	DE	IP
P1	10.10.08	INDEPENDENT CHECK	DE	IP

Network Rail

Network Rail Infrastructure Ltd
Registered Office:
Kings Place
90 York Way
London
N1 9AG

Approved	Paul Clark	Snr. Proj. Eng. Manager Infrastructure Investment Building and Civils	P.C.	MAY 10
	Name	Position	Signature	Date

Master copy with original signatures held by Network Rail HQ CIVIL ENGINEERING STANDARD DESIGN

© COPYRIGHT NETWORK RAIL 2009

'Z' TYPE UNDERBRIDGE STANDARD DRAWINGS

STEELWORK GENERAL ASSEMBLY DETAILS 25° TO 50° SKEW FILLER BEAM FLOOR

Scale	AS SHOWN	
Drawing Number	NR/CIV/SD/1213	B