Supplementary Information

The following information is associated with Network Rail Standard:
NR CIV/SD/1228 Rev B

Additional Content Access

Click the link below to access CAD version of this drawing.

CAD Drawing

- CIV/SD/1228

If you have any questions, or need assistance, please contact **IHS Support**

Information accessed via the links above is the property of the Copyright holder

IHS Additional Content Page

Documents
Document Sharing Hub

Copyright Network Rail
Provided by IHS under license with Network Rail
No reproduction or networking permitted without license from IHS
Full document details: NR NR-CIV-SD-1228 ISSUE B 2010

Licensee=Weston Williamson/5989497001, User=sam, albett
Not for Resale, 03/27/2016 21:23:24 MDT

Copyright Network Rail
Provided by IHS under license with Network Rail
No reproduction or networking permitted without license from IHS
Full document details: NR NR-CIV-SD-1228 ISSUE B 2010
Licensee:-Weston Williamson5893497001, User:Sam. abbott
Not for Resale, 03/27/2016 21:23:24 MDT

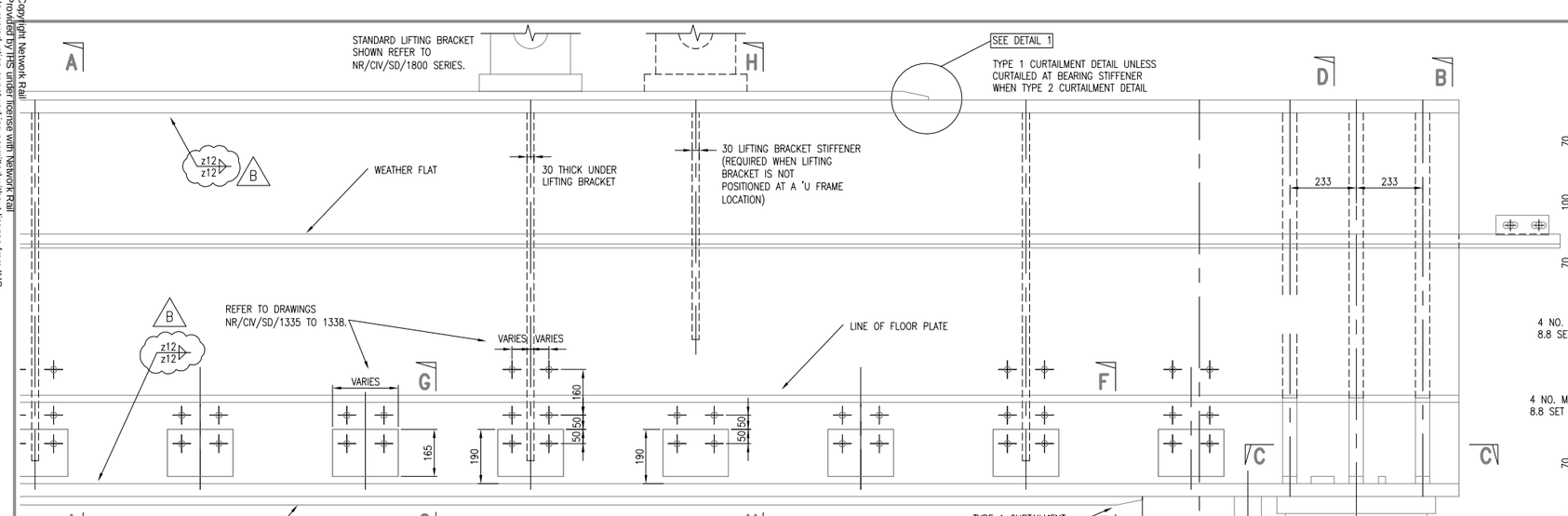

PART ELEVATION ON INSIDE FACE OF MAIN GIRDER

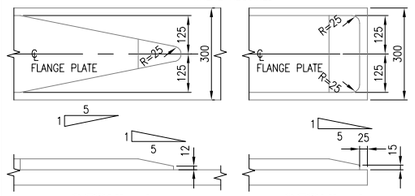

DETAIL 1 CURTAILMENT DETAIL TYPE 1

DETAIL 1 CURTAILMENT DETAIL TYPE 2

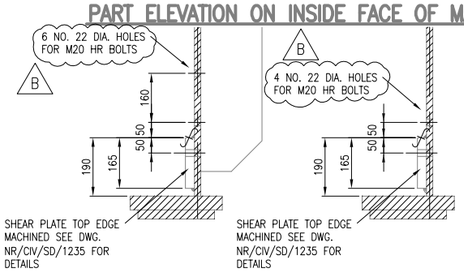

SECTION F–F

SECTION G–G

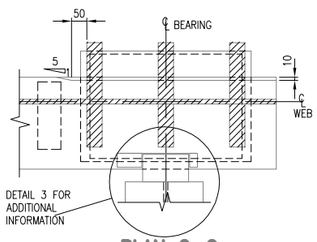

PLAN C–C

ENLARGED DETAIL 3

SCALE 1:5

SECTION J–J

SCALE 1:5

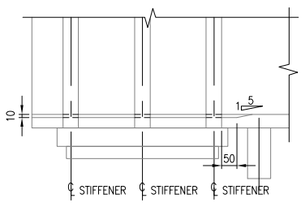

ELEVATION E–E

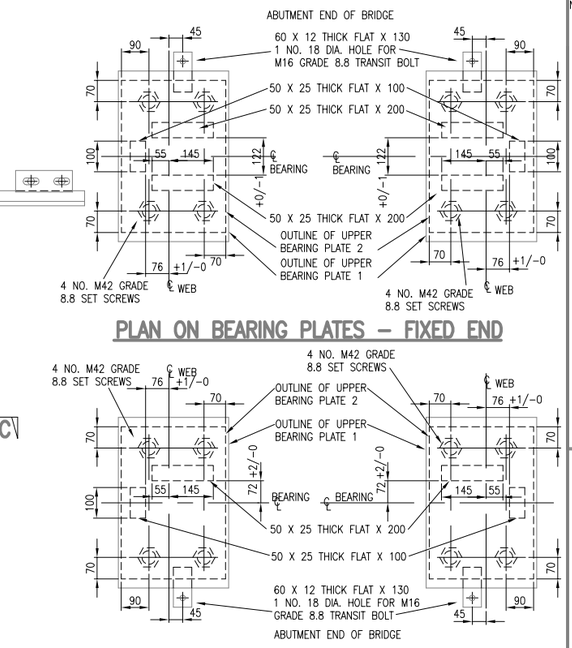

PLAN ON BEARING PLATES – FIXED END

PLAN ON BEARING PLATES – FREE END

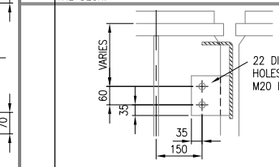

DETAIL FOR DRILLING STIFFENERS ON ONE OF THE 6 FOOT GIRDERS FOR THE FILLER RAIL

(IF REQUIRED)
(CASE SHOWN IS FOR LEVEL DECKS. SEE USER GUIDE FOR CANTED DECKS)

SECTION A–A THROUGH OUTER GIRDER

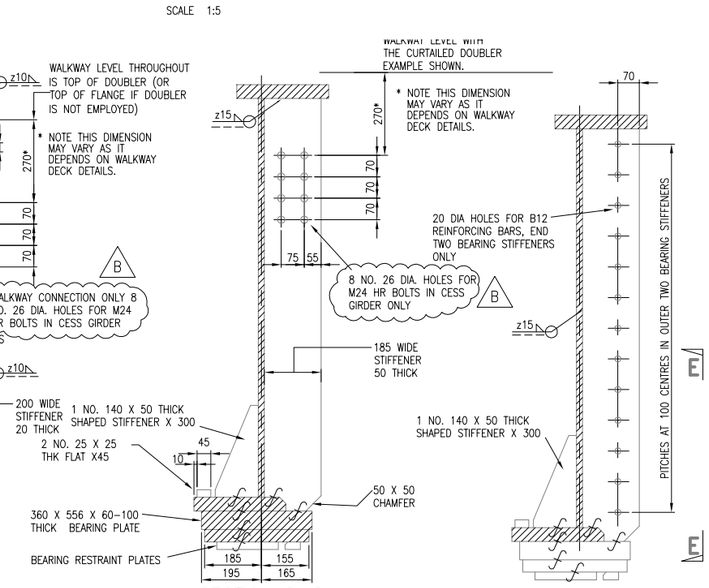

SECTION D–D THROUGH OUTER GIRDER

SECTION B–B SHOWING BEARING STIFFENER

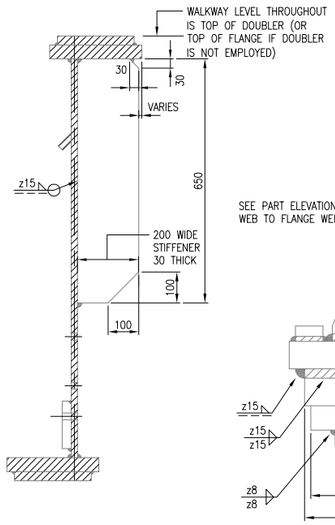

SECTION H–H THROUGH OUTER GIRDER

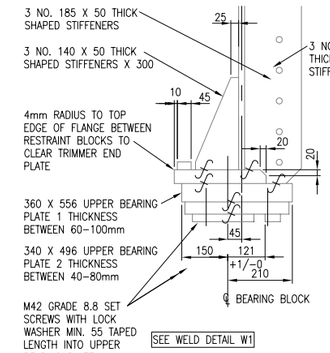

HORIZONTAL DECKS

BEARING PLATE DETAIL

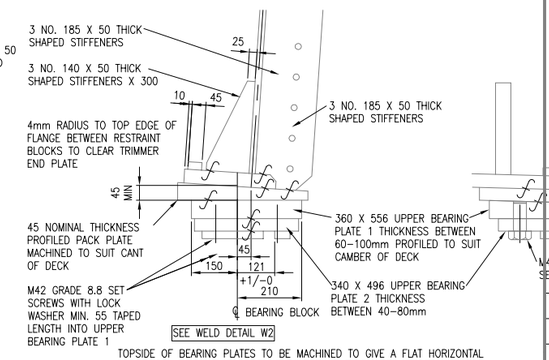

SUPERELEVATED DECKS

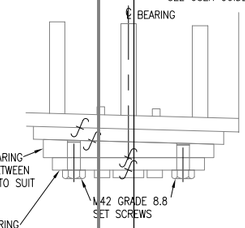

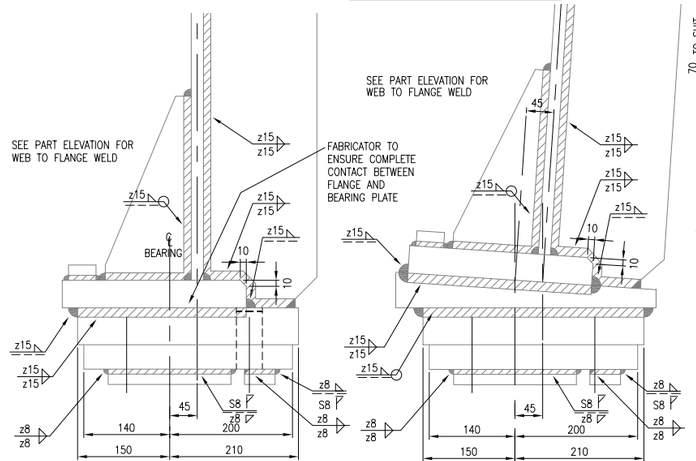

WELD DETAIL W1

SCALE 1:5

WELD DETAIL W2

SCALE 1:5

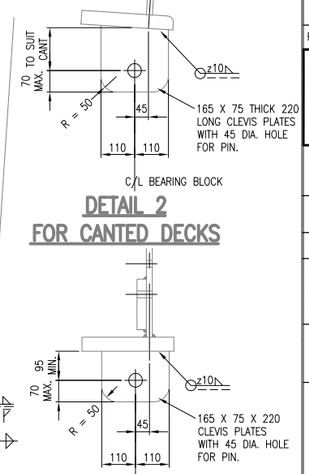

DETAIL 2 FOR CANTED DECKS

DETAIL 2 FOR HORIZONTAL DECKS

DRAWING No. NR/CIV/SD/1228

NOTES

1. REFER TO DRAWING NR/CIV/SD/1220 FOR NOTES.
2. REFER TO GENERAL ASSEMBLY DRAWINGS FOR STIFFENER CENTRES (NR/CIV/SD/1210 SERIES)
3. CAMBER AND ELEVATION OF MAIN GIRDERS AT END OF STEELWORK ERECTION.

   WEB PLATES SHALL BE CUT TO GIVE A CAMBER OF 1/500th OF THE SPAN, VIS

   SPAN 500

   ENDS OF WEB AND ALL STIFFENERS SHALL BE SQUARE TO THIS CHORD
4. FOR MAIN GIRDER SIZE DRAWING SEE NR/CIV/SD/1225 TO 1227.
5. TOP SIDE OF BEARING PLATES TO BE MACHINED TO GIVE A FLAT HORIZONTAL UNDERSIDE, ALLOWING FOR FIT UP TO THE AS FABRICATED GIRDER AND FOR DIFFERENCES IN BEARING LEVELS, CAMBERS AND SUPERELEVATION OF DECKS AS DETAILED ON STEELWORK GENERAL ASSEMBLY DRAWINGS.
6. BEARING PLATES MACHINED TO ENSURE THE BOTTOM SURFACE IS HORIZONTAL UNDER THE SELF WEIGHT OF THE DECK.

Rev	Date	Description of revision	Design'd	C'kd
B	MAY 10	EUROCODE ISSUE	AGW	NY
A	APR 09	FIRST ISSUE	AGW	NY
P4	30.03.09	FINAL REVIEW FOR FORM B	DE	IP
P3	23.12.08	ISSUE FOR PUBLICATION	DE	IP
P2	31.10.08	INDEPENDENT CHECK	DE	IP
P1	10.10.08	INDEPENDENT CHECK	DE	IP

Network Rail

Network Rail Infrastructure Ltd
Registered Office:
Kings Place
90 York Way
London
N1 9AG

Approved	Paul Clark	Snr. Proj. Eng. Manager Infrastructure Investment Building and Civils	P.C.	MAY 10
	Name	Position	Signature	Date

Master copy with original signatures held by Network Rail HQ CIVIL ENGINEERING STANDARD DESIGN

© COPYRIGHT NETWORK RAIL 2009

'Z' TYPE UNDERBRIDGE STANDARD DRAWINGS

MAIN GIRDER STEELWORK DETAILS STEEL FLOOR

Scale	1:10 U.N.O.	
Drawing Number	NR/CIV/SD/1228	B

Documents
Document Sharing Hub