Supplementary Information

The following information is associated with Network Rail Standard:
NR CIV/SD/1231 Rev B

Additional Content Access

Click the link below to access CAD version of this drawing.

CAD Drawing

- CIV/SD/1231

If you have any questions, or need assistance, please contact **IHS Support**

Information accessed via the links above is the property of the Copyright holder

IHS Additional Content Page

Documents
Document Sharing Hub

Copyright Network Rail
Provided by IHS under license with Network Rail
No reproduction or networking permitted without license from IHS
Full document details: NR NR-CIV-SD-1231 ISSUE B 2010

Licensee=Weston Williamson/5989497001, User=sam, albett
Not for Resale, 03/27/2016 21:24:46 MDT

Copyright Network Rail
Provided by IHS under license with Network Rail
No reproduction or networking permitted without license from IHS
Full document details: NR NR-CIV-SD-1231 ISSUE B 2010
Licensee=Weston Williamson/5889497001, User=sam. albett
Not for Resale, 03/27/2016 21:24:46 MDT

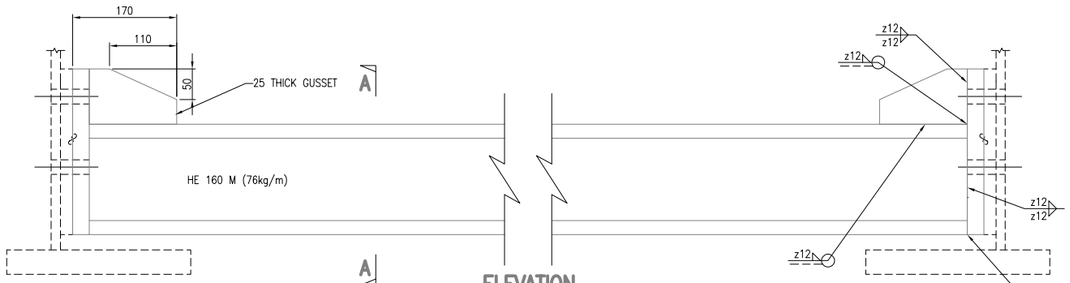

ELEVATION
DETAILS OF CROSS GIRDERS (NON 'U' FRAMES)
SCALE 1:5

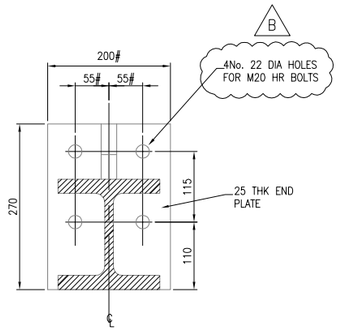

SECTION A–A
SCALE 1:5

FANNED CROSS GIRDER ENDPLATES SIMILAR EXCEPT # MARKED DIMENSIONS DO NOT APPLY. SEE PLAN OF FANNED CROSS GIRDER.

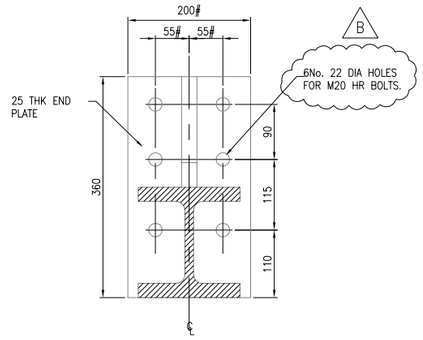

SECTION B–B
SCALE 1:5

FANNED CROSS GIRDER ENDPLATES SIMILAR EXCEPT # MARKED DIMENSIONS DO NOT APPLY. SEE PLAN OF FANNED CROSS GIRDER.

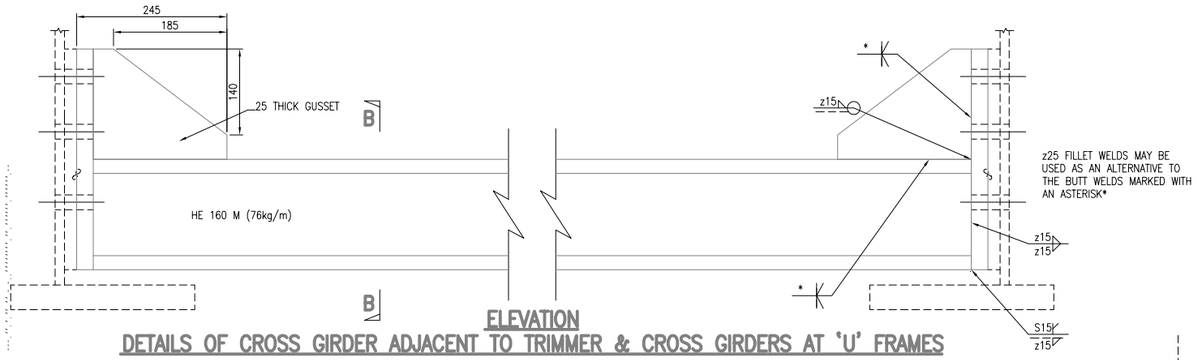

ELEVATION
DETAILS OF CROSS GIRDER ADJACENT TO TRIMMER & CROSS GIRDERS AT 'U' FRAMES
SCALE 1:5

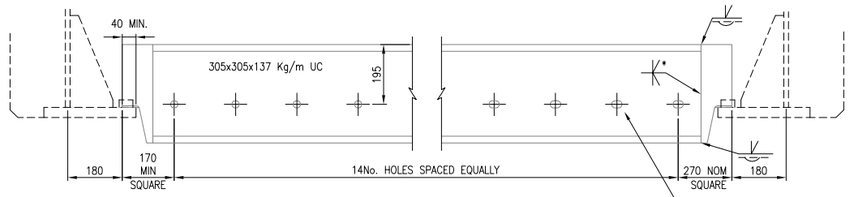

HOLE POSITIONS TO BE DETERMINED BY THE DESIGNER TO SUIT THE LOCATION OF THE TRIMMED CROSS GIRDER GUSSET DOWNSTANDS AND REINFORCEMENT ARRANGEMENT THEY PREPARE FOR THE PARTICULAR BRIDGE SKEW.

DETAILS OF TRIMMER GIRDER ELEVATION
SCALE 1:10
(SQUARE TO MAIN GIRDERS)

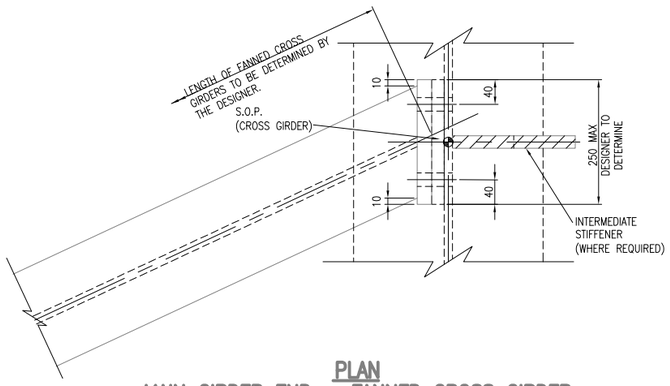

PLAN
MAIN GIRDER END – FANNED CROSS GIRDER
SCALE 1:5

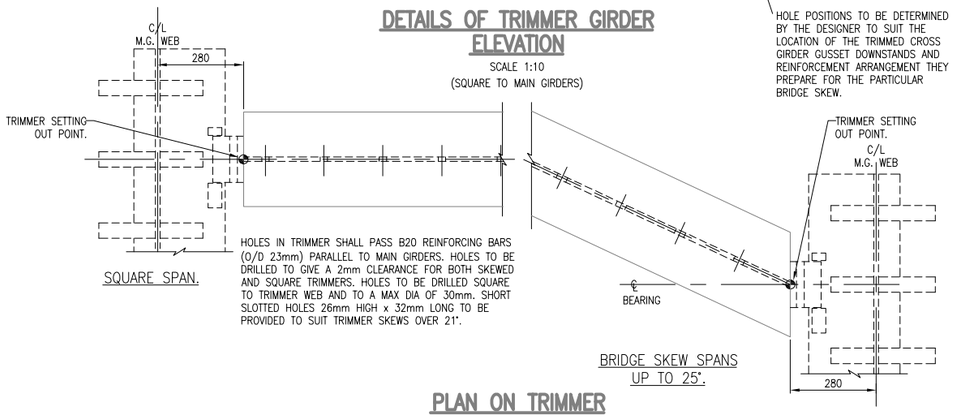

SQUARE SPAN.

HOLES IN TRIMMER SHALL PASS B20 REINFORCING BARS (O/D 23mm) PARALLEL TO MAIN GIRDERS. HOLES TO BE DRILLED TO GIVE A 2mm CLEARANCE FOR BOTH SKEWED AND SQUARE TRIMMERS. HOLES TO BE DRILLED SQUARE TO TRIMMER WEB AND TO A MAX DIA OF 30mm. SHORT SLOTTED HOLES 26mm HIGH x 32mm LONG TO BE PROVIDED TO SUIT TRIMMER SKEWS OVER 21°.

BRIDGE SKEW SPANS UP TO 25°.

PLAN ON TRIMMER
SCALE 1:10

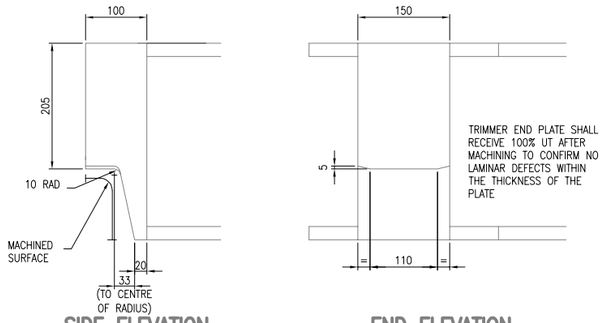

SIDE ELEVATION — END ELEVATION

DETAIL OF TRIMMER END PLATE
SCALE 1:5

DRAWING No. NR/CIV/SD/1231

NOTES

1 REFER TO DRAWING NR/CIV/SD/1230 FOR NOTES.

Rev	Date	Description of revision	Design'd	C'kd
B	MAY 10	EUROCODE ISSUE	AGW	NY
A	APR 09	FIRST ISSUE	AGW	NY
P4	30.03.09	FINAL REVIEW FOR FORM B	DE	IP
P3	23.12.08	ISSUE FOR PUBLICATION	DE	IP
P2	31.10.08	AMENDED AS SHOWN	DE	IP
P1	10.10.08	INDEPENDENT CHECK	DE	IP

Network Rail

Network Rail Infrastructure Ltd
Registered Office:
Kings Place
90 York Way
London
N1 9AG

Approved	Paul Clark	Snr. Proj. Eng. Manager Infrastructure Investment Building and Civils	P.C.	MAY 10
	Name	Position	Signature	Date

Master copy with original signatures held by Network Rail HQ CIVIL ENGINEERING STANDARD DESIGN

© COPYRIGHT NETWORK RAIL 2009

'Z' TYPE UNDERBRIDGE STANDARD DRAWINGS

DETAILS OF CROSS GIRDER AND TRIMMER GIRDER 0° TO 25° SKEW FILLER BEAM FLOOR

Scale	AS SHOWN
Drawing Number	NR/CIV/SD/1231 B

AVA Documents
Document Sharing Hub