Supplementary Information

The following information is associated with Network Rail Standard:
NR CIV/SD/1237 Rev B

Additional Content Access

Click the link below to access CAD version of this drawing.

CAD Drawing

- CIV/SD/1237

If you have any questions, or need assistance, please contact **IHS Support**

Information accessed via the links above is the property of the Copyright holder

IHS Additional Content Page

--`,,,,,`,,,,,`,,`,,,,,,`-`-`,,`,,`,`,,`---

Documents
Document Sharing Hub

Copyright Network Rail
Provided by IHS under license with Network Rail
No reproduction or networking permitted without license from IHS
Full document details: NR NR-CIV-SD-1237 ISSUE B 2010

Licensee=Weston Williamson/5989497001, User=sam, albett
Not for Resale, 03/27/2016 21:26:02 MDT

Copyright Network Rail
Provided by IHS under license with Network Rail
No reproduction or networking permitted without license from IHS
Full document details: NR NR-CIV-SD-1237 ISSUE B 2010
Licensee=Weston Williamson/5989497001, User=sam. albert
Not for Resale, 03/27/2016 21:26:02 MDT

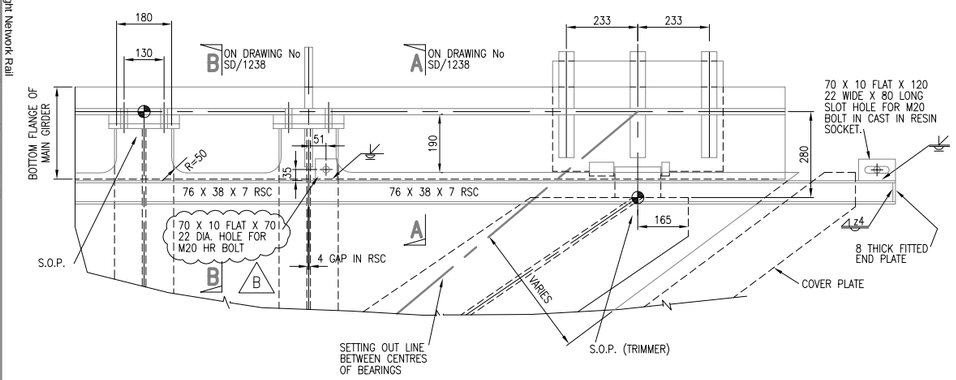

DETAIL AT ACUTE END OF GIRDER FOR 25° TO 50° BRIDGE SKEW

SCALE 1:10

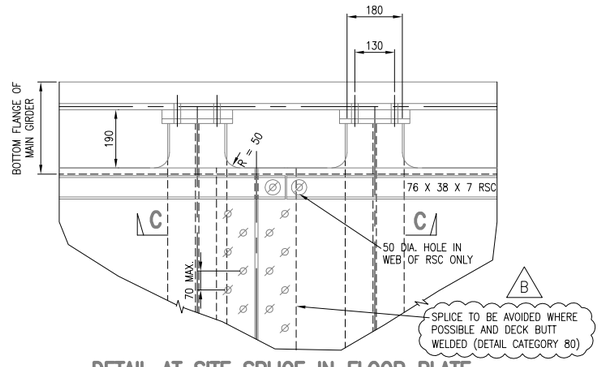

DETAIL AT SITE SPLICE IN FLOOR PLATE FOR RIBS PERPENDICULAR TO MAIN GIRDERS

SCALE 1:10

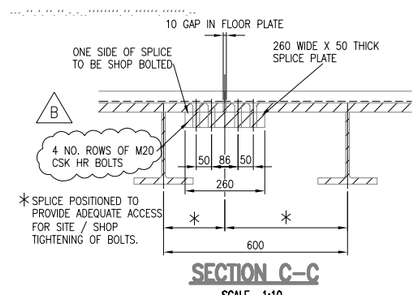

SECTION C–C

SCALE 1:10

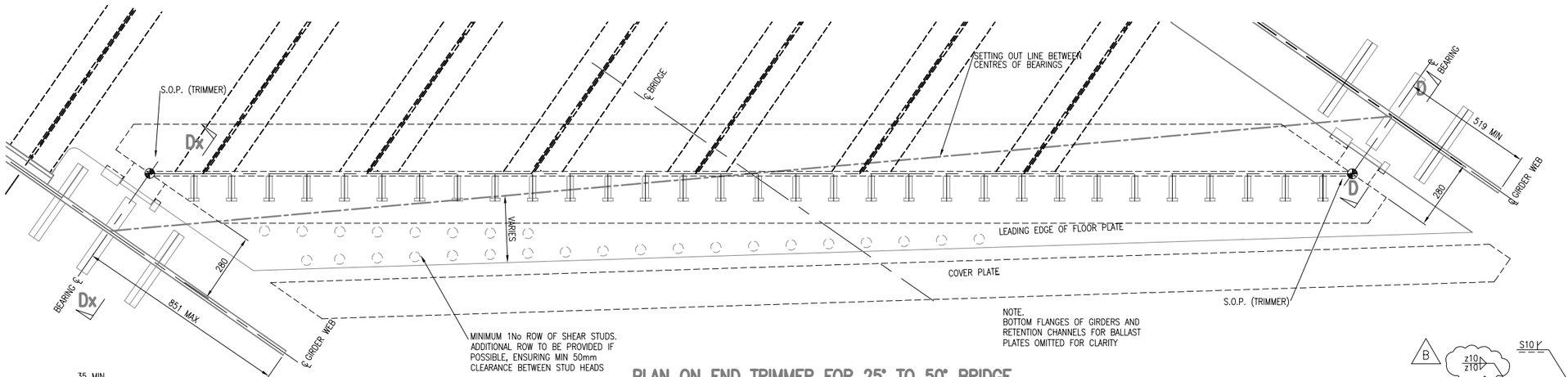

PLAN ON END TRIMMER FOR 25° TO 50° BRIDGE

SCALE 1:10

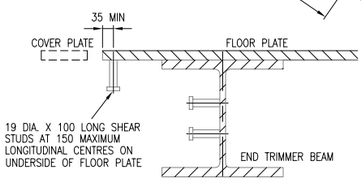

SECTION F–F

SCALE 1:10

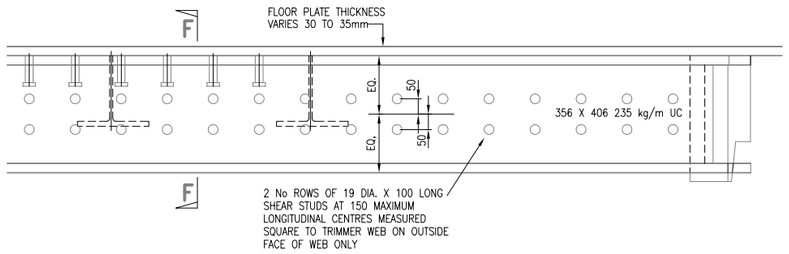

PART ELEVATION ON END TRIMMER FOR 25° TO 50° BRIDGE

SCALE 1:10

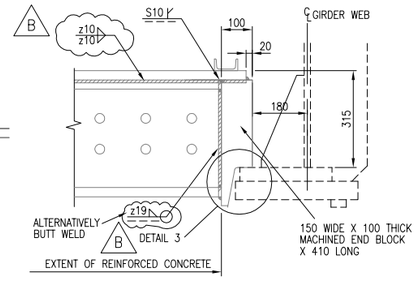

SECTION D–D
SECTION Dx–Dx OPP. HAND

SCALE 1:10

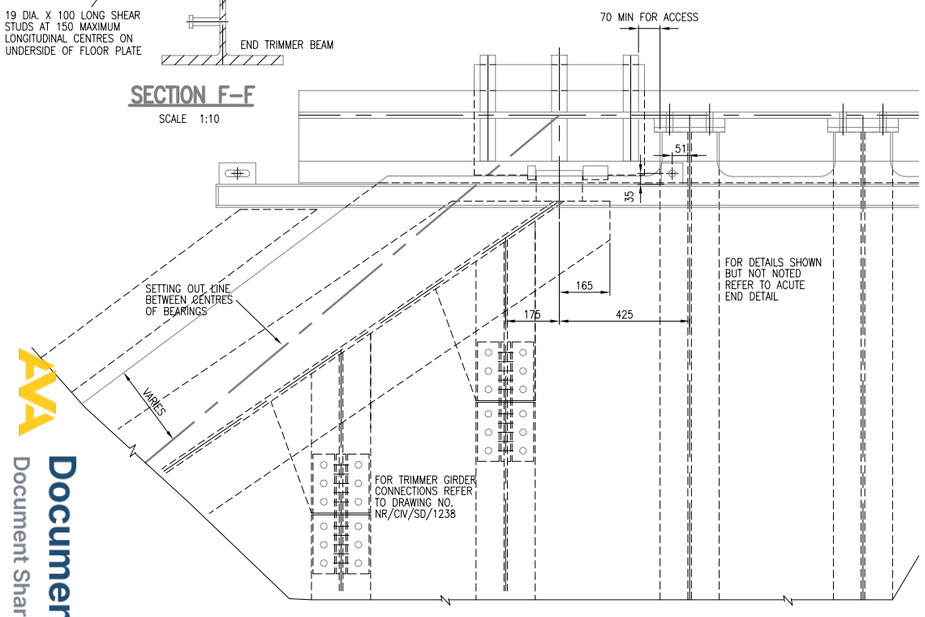

DETAIL AT OBTUSE END OF GIRDER FOR 25° TO 50° BRIDGE SKEW

SCALE 1:10

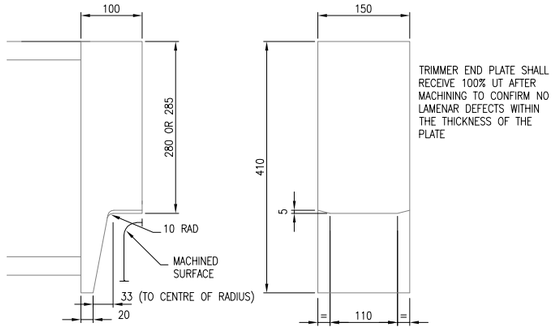

SIDE ELEVATION. END ELEVATION.

DETAIL 3 (TRIMMER END PLATE)

SCALE 1:5

DRAWING No. NR/CIV/SD/1237

NOTES

1. REFER TO DRAWING NR/CIV/SD/1230 FOR NOTES.
2. SEE TABLE BELOW FOR SELECTION OF HEAVY GIRDERS AND LIGHT GIRDERS.

TRAFFIC \ ANNUAL TONNAGE ×10⁶	42–27	27–18	18–12	12–7
25t axles	HEAVY GIRDERS		LIGHT GIRDERS	
EC Mix				
Type 9 MUs				

B DECK PLATE 30mm THICK FOR LIGHT.
DECK PLATE 35mm THICK FOR HEAVY.

3. DECK PLATE SHALL NOT EXTEND PAST THE ENDS OF THE MAIN GIRDERS.
4. WHERE BRIDGE SKEW IS GREATER THAN 46°, DEPENDING ON DECK WIDTH, EDGES OF DECK PLATE AND CONCRETE MAY NOT BE PARALLEL TO THE BRIDGE SKEW AND THE SUBSTRUCTURE SHALL ACCOMMODATE ANY DIFFERENCE.
5. IT IS RECOMMENDED THAT END PLATES ARE MACHINED TO ENSURE NO GAPS WITH SHEAR PLATES AND WELDED TO TRANSVERSE RIBS AFTER TRIAL FIT UP.

Rev	Date	Description of revision	Design'd	C'kd
B	MAY 10	EUROCODE ISSUE	AGW	NY
A	APR 09	FIRST ISSUE	AGW	NY
P4	30.03.09	FINAL REVIEW FOR FORM B	DE	IP
P3	23.12.08	ISSUE FOR PUBLICATION	DE	IP
P2	31.10.08	INDEPENDENT CHECK	DE	IP
P1	10.10.08	INDEPENDENT CHECK	DE	IP

Network Rail

Network Rail Infrastructure Ltd
Registered Office:
Kings Place
90 York Way
London
N1 9AG

Approved	Paul Clark	Snr. Proj. Eng. Manager Infrastructure Investment Building and Civils	P.C.	MAY 10
	Name	Position	Signature	Date

Master copy with original signatures held by Network Rail HQ CIVIL ENGINEERING STANDARD DESIGN

© COPYRIGHT NETWORK RAIL 2009

'Z' TYPE UNDERBRIDGE STANDARD DRAWINGS

DETAILS OF TRANSVERSE RIB AND TRIMMER GIRDER 25° TO 50° SKEW STEEL FLOOR SHEET 1 OF 2

Scale	AS SHOWN	
Drawing Number	NR/CIV/SD/1237	B

AVA Documents
Document Sharing Hub