Supplementary Information

The following information is associated with Network Rail Standard:
NR CIV/SD/1263 Rev B

Additional Content Access

Click the link below to access CAD version of this drawing.

CAD Drawing

- CIV/SD/1263

If you have any questions, or need assistance, please contact **IHS Support**

Information accessed via the links above is the property of the Copyright holder

IHS Additional Content Page

Documents
Document Sharing Hub

Copyright Network Rail
Provided by IHS under license with Network Rail
No reproduction or networking permitted without license from IHS
Full document details: NR NR-CIV-SD-1263 ISSUE B 2010

Licensee=Weston Williamson/5989497001, User=sam, albett
Not for Resale, 03/27/2016 21:33:28 MDT

Copyright Network Rail
Provided by IHS under license with Network Rail
No reproduction or networking permitted without license from IHS
Full document details: NR NR-CIV-SD-1263 ISSUE B 2010
Licensee=Weston Williamson/5989497001, User=sam, albert
Not for Resale, 03/27/2016 21:33:28 MDT

DRAWING No. NR/CIV/SD/1263	
NOTES 1	REFER TO DRAWING NR/CIV/SD/1260 FOR NOTES.

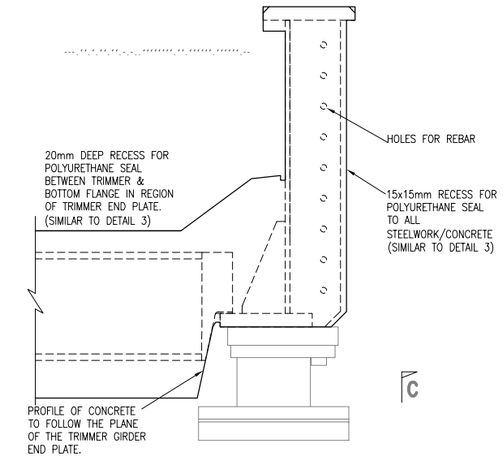

SECTIONAL ELEVATION ON E–E

SCALE 1:10

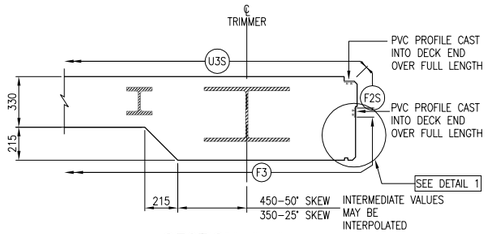

SECTION A–A

SCALE 1:20

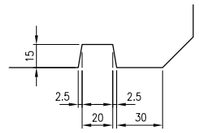

DRIP DETAIL

SCALE 1:2

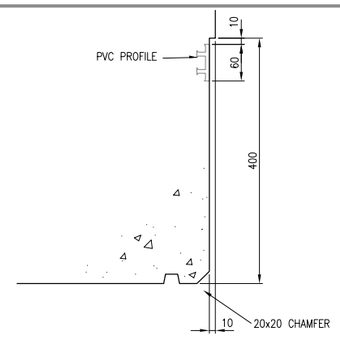

DETAIL 1

SCALE 1:5

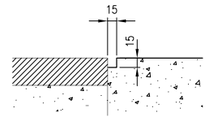

DETAIL 3

SCALE 1:5

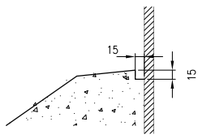

DETAIL 2

SCALE 1:5

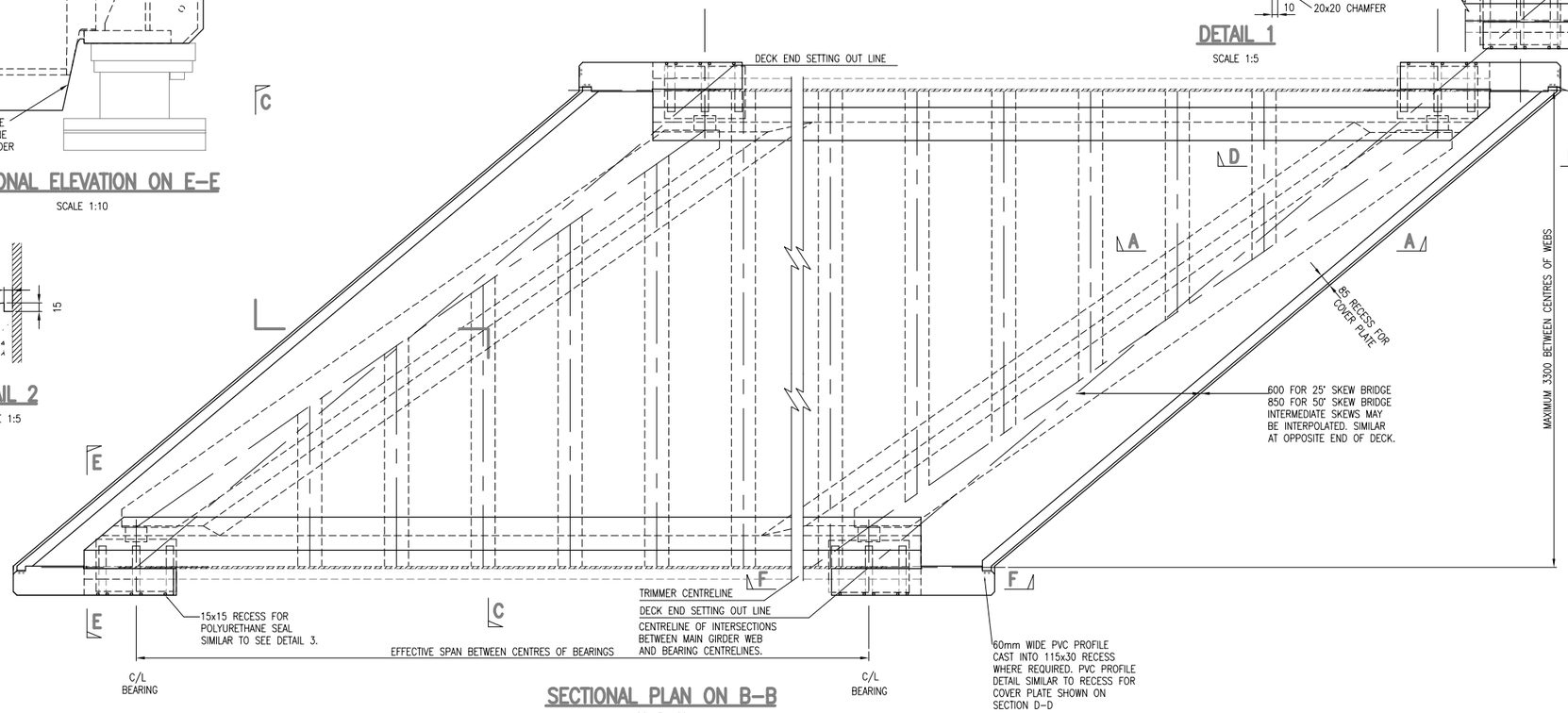

SECTIONAL PLAN ON B–B

SCALE 1:20

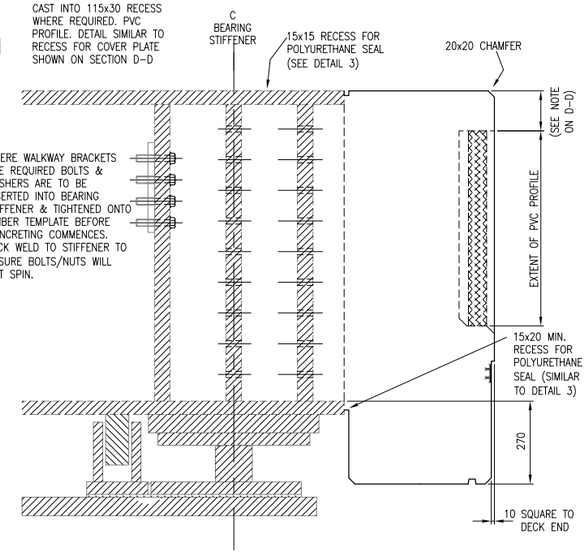

SECTIONAL ELEVATION ON F–F

SCALE 1:10

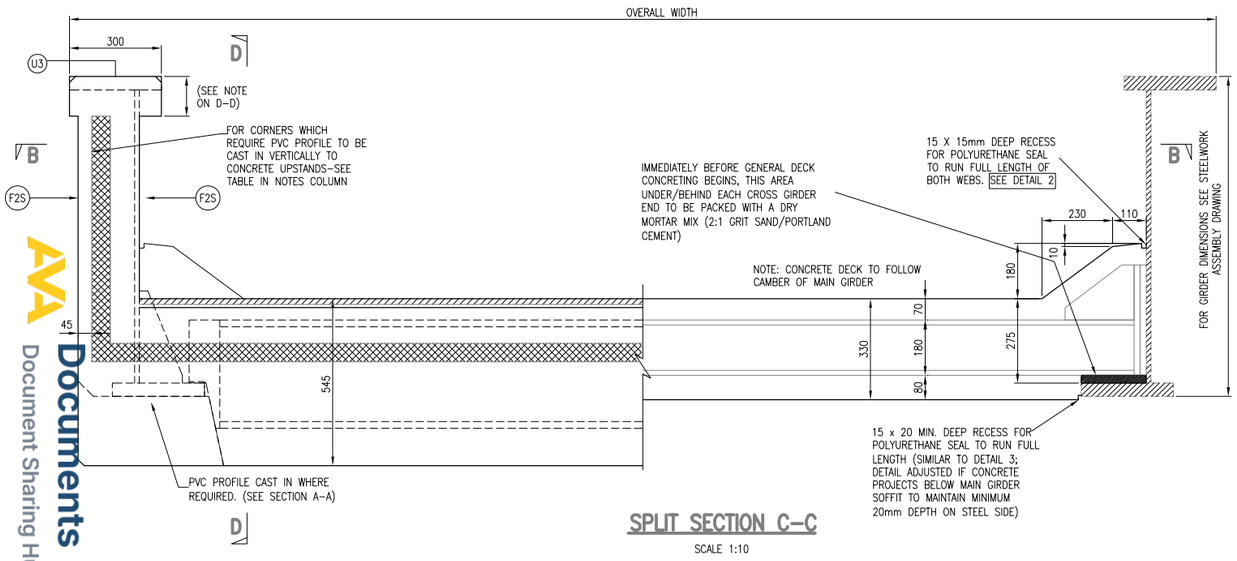

SPLIT SECTION C–C

SCALE 1:10

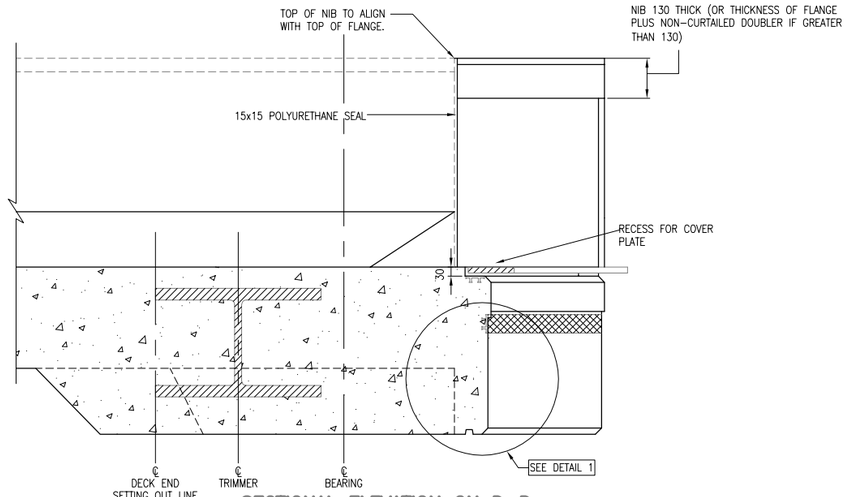

SECTIONAL ELEVATION ON D–D

SCALE 1:10

Rev	Date	Description of revision	Design'd	C'kd
B	MAY 10	EUROCODE ISSUE	AGW	NY
A	APR 09	FIRST ISSUE	AGW	NY
P4	30.03.09	FINAL REVIEW FOR FORM B	DE	IP
P3	23.12.08	ISSUE FOR PUBLICATION	DE	IP
P2	31.10.08	AMENDED AS SHOWN	DE	IP
P1	10.10.08	INDEPENDENT CHECK	DE	IP

Network Rail

Network Rail Infrastructure Ltd
Registered Office:
Kings Place
90 York Way
London
N1 9AG

Approved	Paul Clark	Snr. Proj. Eng. Manager Infrastructure Investment Building and Civils	P.C.	MAY 10
	Name	Position	Signature	Date

Master copy with original signatures held by Network Rail HQ CIVIL ENGINEERING STANDARD DESIGN

© COPYRIGHT NETWORK RAIL 2009

'Z' TYPE UNDERBRIDGE STANDARD DRAWINGS

CONCRETE DETAILS FOR 25° TO 50° SKEW FILLER BEAM FLOOR

Scale	AS SHOWN	
Drawing Number	NR/CIV/SD/1263	B

AVA Documents
Document Sharing Hub